C.S.O.

CONFIDENTIAL

(Formerly)

1537

SHI/NAV/2#2

64/45

1
5
3
7.

SUBJECT :

HARBOUR & COASTWISE LIGHTS.

Other correspondence dated 3/IV/52-24/X/52 in 64/45.

CONNECTED FILES.

UMBER AND YEAR.	
I/32/49	
/51/50	
64/45.	SAME TITLE.
	2177 Navigation lights & beacons
	2177/B " " - Mangeary light
	2177/A " " - Radio beacon

URGENT

H/M

Upkeep of Lights & Beacons

I have received several criticisms of the Colony: Lighthouses & Beacons.

2) Will you please write me a concise minute setting out:-

a) Position of existing lighthouses & Beacons

b) Which ones are not working & for what reason

c) What you propose to do to maintain them in good working order

3) What progress has been made since your minute on (20)?

2/4

22

H.C.S.

Your above minute:-

(a) Harbour lights in entrance and approaches to Port Stanley at following points -

1. Engineer Point
2. Navy Point
3. Blanco Bay
4. Memgeary Point.

'Camp' lights in following positions -

1. Porpoise Point
2. Cape Meredith.

(b) 1. Engineer Point - defective tubing - new tubing has been ordered.
2. Memgeary Point - cylinders expired - new ones landed but not yet fitted.
? 3. Bull Point (Porpoise Pt) - reason unknown - possibly defective tubing.
4. Cape Meredith - reason unknown.

(c) See my previous comments in file 64/45

2. Both Navy Point and Blanco Bay have been refitted and are now operating successfully. Memgeary Point and Engineer Point are ready to be started again soon.

13.4.52.

H.C.S. As Blanco Bay & Navy Point are still operating successfully & we have six spare burners in hand, I suggest we cancel any further burners.

Referred 18/6

ACS B.O. on H/M's return 19/6

B.O. 29.6.52

Y.H. You wish to discuss with H.M.

2/7

C.S. Could you please send these files over to the Owen to see to-day, as he is going into the question with H/M in the first instance.

S 27

H.C.S.

I have seen the Harbour Master about the lights with these files and received very little extra information from him about them except that there are full cylinders in 4 fathoms of water near and for Memgeary light.

2. I would propose to purchase or order no more lamps or burners for the present but to purchase out of P.W.D. Unallocated stores all light spares, sun valves etc. that have been there for years and so get the whole lot together.

3. I note there are only 5 full gas cylinders here: enough to put Memgeary light on . Could investigations be made about the 35 empties which I gather by heresay were sent to Montevideo in December to be filled and appear to be still there. The single cylinders recently put in the Narrows lights will only last 3 months.

4. I suggest that Mr. M. Lehen be put on the same monthly pay rate as Mr.M.McMullen the Coxswain on the understanding that he maintains (keeps going) the 4 lights in Port William and the Narrows.

5. Re. Bull Point light: I suggest that the Philomel call in there when making her first South about trip, bring back all empty cylinders and a tally of the full ones there.

That arrangements be made through the Camp Manager, Mr.Vinsen, to pay the shepherd, Mr. Duncan, a small say quarterly sum to keep the light going, change cylinders etc. drag them across from the landing place in Bull Cove and report when the light goes out and why! when it is beyond his capabilities to repair it on the spot (and he is a pretty clever fellow with his hands).

That he be there when Philomel goes there and that Sollis shows him as much as he can about how it works.

Note. The negotiations with Mr. Vinsen could be started now if this course is approved.

6. The Cape Meredith light I suggest be tested similarly to Bull Point: the ship effecting initial repairs etc. from a landing in Kitts Cove when she is making a visit to Port Stephens. Also that she repair the now derelict cylinder shed at Kitts creek.

That arrangements be made with Mr..Beaty when he is in town in August for the farm to haul full and empty cylinders between the light and Kitts Creek and for the shepherds changing horses down there or in the 3 Crowns to attend the lights and be paid for same.

7. Re. the 3 lights proposed at McBrides Head, Cape Dolphin and F x Bay quarry that on e be assembled in toto plus the necessary cement, picks and shovels etc. for shipment .then any fine day it could be taken to Seal Bay and landed there by the shepherd's house or taken and landed at Fox Bay jetty. If this is agreed to negotiations could be started by phone with the Manager Port Louis to haul the light etc. over land to McBrides Head and probably to contract for its erection. At Fox Bay the whole could be kept in the care of the Wireless Operator who might be able to make arrangements for it being hauled to the site of erection possibly by farm bren. Or this may have to wait until the Manager returns from leave in U.K..

I would suggest that the Cape Dolphin light arrangements be left until after the other two have been shipped as it is a bad place to land and the ship may have to wait for weeks in the vicinity to land the stuff there : also the Manager Mr. Cameron is away on leave.

John P. Blair

A.D. 5/VII/62

24

Y.H. P. 23.

para 1. Difficult to refrain from punning.

yes - if they are the right type. para 2. Seems the obvious course.

X Early action para 3. This can and will be done.

Agree, we need more information, better reasons. Matter to be pursued on this personnel file. - not personal file. para 4. Appears wrong in principle - if depts. are responsible I fail to see why a member of the dept. be given a special payment and the responsibility made personal.

Agree paras 5 & 6. Subject to figure of payment, arrangement for shepherds to attend seems best solution - We will need to be informed immediately a light ceases to function.

para 7. I see no objection to the suggestion - Sites will have to be 'pinpointed' for information of shipping

Also a P.W.D. commitment. J.H.B. 11/7

C.S.

I think Mr. has made a very practical approach to the problem & action should be taken as early as possibly, since the lights (or lack of same) are a popular grievance.

2) As regards the new lights, this is a P.W.D. commitment ~~work~~ P.W.D. should be brought into the picture, ~~through~~ and he will no doubt welcome helpful suggestions from P.O. It is clearly best to work in with the individual farm management.

C.S. 11/7

H/M.

Above for your action please - I am taking action on X.

J.H.B. 14/7

I don't think there is anything about cylinders being sent away to be refilled in 44/45 attached.

H.P.S.

Para 2 of 23 done.

Telegram sent to Vincent copy see over.

John P. Cline
Acting Harbour Master 15/VII/52

15

To Vincent Northam.

Respecting Bull Point Light.

Would you be willing for, and would you see if the shepherd Mr. Duncan or another, would look after the light to the best of his ability, after same is restarted; and report to Harbour Department, when and for what reasons it goes out. When this is beyond his ability to put right.

He to be paid £5 per annum, say quarterly payments for doing this, and be shown as much as possible how the light works when the light is repaired.

Trusting this meets with approval, I await your reply.

John P. Cline.
Acting Harbour Master.

H.M.

Your minute at 24.

2 The cylinders sent overseas in Dec. were property of Met Dept and were sent to U.K.

3 Will you pl pass on to Oic P.W.S for him to see para 7 page 23 and para 2 of H.M's minute at p. 24

16/7

H.C.S.

Seen Thank you. I passed on.

I cannot do anything about lights without full gas cylinders. & we have Mengeary takes 6.

John P. Cline. 17/VII/52.
Acting Harbour Master.

H.E.S

Seen. Will cooperate with H.M.

Certain bundles of tubular steel, which I understand are for Beacon towers are in the yard. but have so far been unsuccessful in unearthing details.

O/i/c - P.W.D.
A.R. 17/7/52.

BW 20/8/52

20/7

Oic P.W.D. above. Any progress?

27/8

H.C.S.

Harbour Master required one complete light minus any Tower structure. This was delivered aboard Philomel & understand was left at Fox Bay. H/M. suggests that Master of Letitia may have indicated position with somebody local, & that I investigate when I fly out shortly, with the object of getting the light fixed at same time as new Power House contract.

O/i/c P.W.D.
A.R. 28/8/52.

BW 30/9/52

ect :

2606

Originator .....

Office
Ref. No.....

OFFICE MINUTE SHEET.

Formers attached

From.....

No. and Date.....

Referred to :—

(1) Where applicable, proposed action is to be given in the form of a draft out letter.
(2) Enclosures are not to be detached.

These "Winkers" would be suitable for the Narrows at Stanley where a range of under three miles is more than adequate. The Winkers would be no good Mungeany Pt etc. where about 10 miles range is desirable — increase of range means more power consumption & shorter life of battery / bigger batteries.

To be frank, I think energies would be better spent on keeping the present "gas" lights in order - & erection of new 'gas' lights already planned - rather than embarking on new types.

The Narrows have been unlit for some weeks now

[illegible] 14.9.52.

After Action :—

If necessary, continue overleaf.

(6080) A.O.St.

Dir P.W.D.

Some minute at 5.

Anything to report yet?

H.C.S

Contacted W.P. R. Hills (contractor) at Fox Bay 16/9 with view to him doing the job. Mr. Clement of Parke Bros. agreed to do carriage, also contact Capt. White to fix spot.

Fixed meeting between H/M - Capt. White & self on the Fitzroy's return, at which the Capt. made alternative suggestions:— No. 2. 100 watt lights fixed in line to guide shipping in through Kelp reef south of Gaskey Point, with the Beacon placed on Kussac island outside of harbour.

He later went aboard H.M.S. St. Austell Bay to discuss amendment with Navigator, & informed me that it was now left for Capt. St. A.B. & C.R.E. to investigate his suggestions when they built Fox Bay.

A.H. 7/10.

Y.H.

Above f.i.

8/X

C.S.

Cy H.M. should seek an interview with Capt. Cairns & his Navigating Officer & pr. final recommendations.

2) He should also discuss with O/C P.W.D. the practical difficulties involved in erecting the light on the Kussac island as since if there is little to choose between the sites it may be more convenient to plump for the land one.

8/10

H.M.

H. His minute f.n.a. pl.

9/X

H.C.S.

I have had interview. Navigating Officer agrees to Capt. White's suggestions. I have also seen O/C P.W.D.

John P. Blair A.H.M. 13/X/52.

H.M. See:-

Last 3 words of para 1 of H. His minute pl.

H.C.S.

Seen. Lt. & P.N.D. who will [illegible] erecting light. 23/10

John P. Blair A.H.M. 23/10/52

~~27~~ 7

Dir P.W.D.

P. 26.

What is the present position pl

27/10

H.C.S

The task of P.W.D is to erect the beacon when position is indicated. It is up to the Mariners min, the right to decide the position, & as Harbour Dept are responsible for the beacons, then they should get the answer & instruct me as to position for erection

A.L. 28/10.

A.M.

F.y.o. pl.

4/11

H.C.S.

Knob Island.

J.R.O.

A.H.M. 5/XI/52

Y.H.

8

Tose Bay Beacon

I have the honour to report on result of discussion between Hills (contractor) & self, regarding erection of Beacon on Tussock Island.

He states that while erection on the Island is not impossible, that it bristles with difficulties which would raise the cost considerably above that of erection on Quarry Point. I.E. everything would have to be boated out, & then manhandled from beach to peak of Island. Weather conditions also make consistent progress impossible, whereas at Quarry point the material can be transported to the spot (including water) without being further manhandled, & the work could be accomplised much more quickly.

OIC. (P.W.)

A. Hartwood 13/11/52.

A

9

Y.H.

To see 8 pt. re your minute at 6. & H.M. at 7.

We are still not informed whether there is little to choose between the sites from Navigation point of view.

15/11 B.

C.S. These minutes could go on indefinitely & the only answer is for you to hold a short meeting with ~~Mr.~~ Mr Wm. o/c Prot. & Capt. Phute.

2) I send o/c Prot. on Saturday & told him to confirm (8) with Mr Clements – he was going to speak to him this morning.

3) Meeting must be before Friday sails.

C

A.C.S.

Pl arrange. at Capt White convenience

17/11

D

Y.H.

At a meeting with H.M., Dir P.W.D, and Capt White I was convinced that if a light is to be erected then Knob Island was undoubtedly the best site.

I have since spoken to Capt. Johnson who agrees that Knob Island is from a navigation point of view the best place for the light; but also points out that lights are of little use unless they are reliable and we should therefore be certain that we can maintain a light before we ~~[illegible]~~ install it.

I also gather from Capt. Johnson that to properly maintain present and proposed lights would be almost a full time job for the Philomel, and that in view of the fact there is so little shipping here it is open to question whether a number of our lights are really necessary.

24/11

10

A

G.H.

To please see D. on p. 9 and also 279 in 64/45 attached

With regard to the latter I am strongly opposed to the payment of bonuses of this nature. I agree with you.

24/10

B

C.S. I have been through the papers again and owing to the confusion of files we seem to have been following a red herring over the Fox Bay Light.

1) At (217) & (222) 64/45 it was decided to abandon the Coast Lights for Fox Bay & minor harbour lights.

At (246) 64/45 it was mooted that we put a coast light at Fox Bay after all rather than that it be wasted if the freezer is abandoned. No harbour lights have been ordered.

3) As the freezer still seems to be going forward it appears that we should hold on hand as suggested in para 2 of (246) until we know something definite.

4) In the meantime A.C.S. to sort out these file (there may be well be one or two more on the same subject) & prepare a precis shewing the position regarding all the various lights & proposed lights up to the present day. & their maintenance.

X

C

26/10

A.C.S

& above pl.

26/11

Office Pl. look into this & p.u. as above - on separate sheet

NAVIGATIONAL LIGHTS

PRESENT

Position	Reference No.	Maintenance

PROPOSED

Suggested Position	Ref.	Suggestion for Maintenance (if any)

1537

To: The Controller of Communications,

From: The Colonial Secretary, STANLEY.

P. 279/64/45

Harbour Lights.

I am directed to reply to your memorandum dated 24th October and say that the work should be done as proposed by you but the payment of an incentive bonus cannot be authorised.

(Sgd.) J. E. Briscoe

ACTING COLONIAL SECRETARY.

A

H.C.S. /10

C Affairs - pe. see Schedule prepared by Mr. Smith at b.c.

10/12

B

G.H. Minute at p. 10.

Schedule at b.c submitted all references quoted refer to file 64/45 attached.

30/12

C.

C.S. Bv. 28/1.

D.

1537

5th. January 1953

From: Ag. Harbour Master, Stanley.

To: The Hon. Colonial Secretary, Stanley.

H.C.S.

In respect of the Freezer Lights- Some time ago proposals wre made to put Coastal Lights on Wreck Point, Fannings Head and the Point north of Many Branch Narrows to aid shipping in their approaching the Freezer Site on Red Hill.

May I suggest that orders be placed for small standing lights equivalent to those in the Narrows, and of the same make and pattern as them to facilitate inter-change of spares and maintenance.

However the Vote - Sub Head 6 of Extraordinary Expenditure is under Superintendent of Public Works control. I am therefore sending him a copy of this minute, and suggest that when such lights are erected perhaps the Freezer People for whose benefit they will operate, might undertake the actual maintenance of at least the two on their own coast.

P.V on file

Ag. Harbour Master.

13.

Y.H.'s ~~minute~~ at C on 12.
File resubmitted – you will also wish to see D. on 12.

7/4.

C.S. Cy H.M. to see my minute at (10)B & the schedule at cover & advise if this represents an accurate picture according to his records.

20/4

H.M.

T.S.

22/4

H.C.S.

Seen. Thank you. We have no records.

John P. Blair

A.H.M. 23/IV/63

EXTRACT FROM MINUTE BY H.E. THE GOVERNOR TO H.C.S. OF 20/5/53.

(Original filed in 0500/VII - Import Programme).

.....

(3) Coastal lights.

Could we prevail upon C.D.C. to take on the contract for erection of lights required in vicinity of Ajax? It is in their interest if they are to depend upon P.S.N.C.

.....

Extract from Minute by H.E. the Governor to Hon. Col. Sec. of 19/5/53.

15

(Original filed in 0284/VI/34-41 - Estimates 1953/54).

Expenditure.

.....

Harbour & Coastwise Lights.

XVIII (5) Early action is required.

.....

KIV 14pl.

Harbour & Coastal lights.

The position is as follows:-

A. Existing lights

Place	Type	State of Repair	Comments
Engineer Pt	1 Cylinder	In working order	To be maintained by Harbour Dept. Cy H.M. proposed an incentive bonus for crew of Alert ~~[illegible]~~ for repairs & maintenance, but I rejected.
Navy Pt	"	"	
Blanco Bay	"	"	
Menpeany	6 Cylinder	"	
Porpoise Pt	4 Cyl.	"	Maintained by Philomel & local shepherd (see (278) 64/45)
Cape Meredith	4 Cyl.	No.	Cylinders present but requires lighting by Philomel. We must get this one fixed as soon as possible. Could Bayliss deal with it?

B. Proposed lights.

	Place	Type	Comments.
Fox Bay	1) Knob Pt. Island. 2) Quarry Pt.	As at Engineer & Navy Pt.	To be ordered. One larger light landed there in error. (to be removed)
	(The Knob Island light need only be a very small one: lit only when a ship is entering the passage. Probably red. Pt. cancels Capt. White when he returns.		
Cape Carysfort.		? 4 Cyl.	One light landed at Cow Bay. probably in error. I think this is probably correct as the Hydrographer intended to take it overland from Hoste?
Cape Dolphin.		500 mm.	On jetty waiting for shipment. Cy H.M. states Philomel master considers operation too hazardous. I think it will have to be taken overland.
(239) 64/45	Wreck Pt.		
	Fanning Hd.	300 mm.	I suspect these two lights have been sent to Cow Bay & Fox Bay respectively in error. Consider CDC shd check & manufacture.

P.T.O.

17.

2) As Yr. will see there is a certain amount of confusion which I have been unable to unravel with Capt Hoare. May I pse speak with him as Yr. will no doubt recall arrangements made with Mr Wheble. There is also the question of future maintenance

3) As will be seen from (10) 3 some of this confusion arose from the uncertainty of the Freeze.

28/5

Acay.

MC 29/V

Note however, that the Fox Bay lights (unnecessarily powerful) should be transferred to Ajax Bay and erected and maintained by CDC in whose interest alone they are provided. Fox Bay and Stanley Narrows could be furnished with Wonder lights, battery operated lamps (Chance-Lender Ltd. 30 Curzon Street. London W.1.) which should last longer and prove simpler to maintain than the cylinder-operated jobs. Cow's Foot and Dolphin require 500 mm. lights, cylinder-operated. Cow's Foot is approached from Cow Bay – quite a short haul; Dolphin would almost certainly have to be hacked overland. Please discuss with Mr. Cameron and ask if he can maintain it. It is true that Mundell was put in hand.

MC.

Original filed in 0875/D : Fox Bay, Power Supply.

S.W.
(Intld) C.C. 19/6

18

Fox Bay, East,
West Falkland Islands,
South Atlantic.

C.S.

Pl. ask SW/ to look into this - I don't want it to drag on too long.

(intld) M.C.
18/vi.

14th June, 1953.

Dear Sir Miles,

I found your letter of the 29th May awaiting my arrival back at Fox Bay.

With regard to the Engine house extension I understood that W. Hills was to be approached by the Government for this contract.

Hills is now in Stanley but returns about September under contract to us.

Sometime before he left, Hills asked me that if he got the contract for the Engine House and the Coast lights to be erected here, whether we would lend him our Concrete Mixer and this I agreed to do, and in addition told him we would put the material on the sites, if the light is to be put on the mainland.

We of course at the moment have no one competent to do work of this kind since Berntsen left us.

May I suggest that Hills be approached and be asked to tender for these two jobs, from experience he is a very good man and an excellent worker.

.....

Yours sincerely,

(Sgd) Wickham Clement.

K.I.V. 18pl.

1537

19.

29th June, 53.

Sir,

I am directed to inform you that two 300 mm. coastal lights have been ordered by Government to assist ships navigating to Ajax Bay.

2. The Elder Brethren of Trinity House have advised that they should be erected as follows:-

(a) 51° 27', 00" S. (North of Fannings Head).
59° 07', 30" W.

(b) 51° 30', 00" S. (Wreck Point).
59° 07', 00" W.

3. As these lights are being established purely for the convenience of your Project I am to enquire whether you would be prepared to contract to erect them and subsequently maintain them with cylinders and spare parts supplied by Government, and in the event of your replying in the affirmative if you would submit an estimate of the cost of construction.

The Manager,
AJAX BAY.

/4.

4. An early reply would be appreciated.

I am,
Sir,
Your obedient servant,

(Sgd) C. Campbell

COLONIAL SECRETARY.

No. 1537.

MEMORANDUM.

It is requested that, in any reference to this memorandum the above number and the date may be quoted.

From: The Colonial Secretary,

Stanley, Falkland Islands.

29th June, 1953.

3 W

To: The Harbour Master,

Stanley.

SUBJECT :- Harbour and Coast Lights.

With reference to our discussion with His Excellency please confirm that the following is a full list of action required:-

(a) Engineer Point, Navy Point, Blanco Bay.

To be replaced by battery (winker) lights in due course.

(b) Cape Dolphin.

"Philomel" to land as soon as possible.

(c) Cape Meredith.

"Philomel" to light as soon as possible.

(d) Wreck Point and Fanning Head.

Light from Fox Bay (complete) and Light at Cow Bay (less cylinders) to be erected. I have written to C.D.C.

(e) Fox Bay.

One battery winker type harbour light to be ordered for Knob Island. Second light to be on wireless pole. Please prepare indent based on papers at cover.

(f) Cape Carysfort.

New light to be ordered. Please prepare indent and I will write covering letter. Probably 500 m.m.

S/W. In respect of the above.
I brought it to H.C.S.'s notice that you controle the Vote No. 5 in Extraordinary Expenditure.
He therefore asked me to refer the above to you, & for you to read it as though addressed to you. And asked me to give you every assistance in dealing with it.

John P. Blair
A.H.M. 1/VII/53.

Harbour Master

Pse see (16) - (21).
I wd like to discuss the general question with you - dc. In the

meantime see note (19). Mr Bond tells me that they are anxious to help but want more exact information from you & Co. See arrange to see him before he goes out.

31/7

Recalled for letter from Agt of owner 10/8/53.

to

HCS I have seen Mr Boyd. I can give no further information to him. I suggest he is hand at cost-force.

12/8/53

23

FALKLAND ISLANDS FREEZER COMPANY LTD.

Port Stanley,

7th. August 1953,

The Colonial Secretary,

Port Stanley.

Dear Sir,-

19 We have to acknowledge receipt of your letter dated 29th. June Ref. No. 1537 regarding two coastal lights to assist ships navigating to Ajax Bay.

We would inform that we are quite prepared to erect the lights after the exact positions have been marked, always assuming that we have the materials and the labour force available when the time comes, regarding estimates of cost of construction we cannot submit these as we have not inspected the terrain.

Trusting that the above will meet with your approval,

Yours faithfully,
Falkland Islands Freezer Co. Ltd.,

Manager.

HM.
Sir. Pse consider (23) & let me have your recommendations.

S/W. I can mark the exact positions on the ground at the two points for Mr Boyd - Probably at the end of August with "Philomel". Presumably we shall also have to collect the light beacons from Fox Bay & Case Cargfat & deliver them to Ajax Bay? (See 21)

H.C.S.

The file on this subject was passed to the S/W this morning with reference to the lights at Ajax Bay. Speaking without the file to refer to, the situtation is as follows:-

(a) Stanley Harbour Lights. (Memgeary Point, Blanco Bay, Engineer Point and Navy Point). All these lights are in operation: the R.N. have started to repaint the light beacons at Engineer Point and Navy Point and it is hoped that this will be completed in the near future.

(b) Porpoise Point. In fair condition, but requires re-lighting. "Philomel" sails to do this on August 15th approximately.

(c) Cape Meredith. Also requires re-lighting and new washers. P"hilomel" is scheduled to sail on August 23rd approximately to do this, provided that the Company can manufacture the necessary washers in time.

(d) Cape Carysfort. During my absence the beacon structure has been landed at Cow Bay for hauling overland to Cape Carysfort. Unfortunately I understand that this structure is really intended for Ajax Bay, and it is now intended to pick this up early in September and carry it to Ajax Bay. The position as regards Cape Carysfort is therefore obscure, and it is suggested that we meet with the S/W at an early date to decide upon the future policy.

(e) Cape Dolphin. The structure is in the dockyard awaiting shipment to Cape Dolphin by "Philomel" which can be done at the same time as the Carysfort Light is take to Ajax Bay. But if the S/W is unable to provide the labour to erect this light in the near future, then I consider that it would be better left where it is for the time being rather than on the exposed Cape Dolphin site.

(f) Fox Bay Lights. Nothing has been done about these, except that speaking from memory I believe the file states that one has been delivered but will have to be put down at Ajax Bay now. If so this can be done at the same time as the other from Cape Carysfort is delivered.

(g) Ajax Bay Lights. As mentioned in (d) above, one has apparently been delivered to Cape Carysfort by mistake, and as mentioned in (f) above, the other may have been delivered to Fox Bay by mistake. C.D.C. have agreed to erect these lights after the exact site has been demarked - a comparatively simple matter which I can do when the lights are taken round there. No estimate of the cost is possible from C.D.C. until after the site has been selected - this is obviously reasonable. C.D.C. are willing to maintain these lights.

Generally speaking the position is still very confusedand personally I do not think it will improve until we have got together and decided what is to go where and when it can be done. Mr Oliver, with the best of intentions and a good deal of enthusiasm rushed into this matter and put a light structure out in Cow Bay. Unfortunately, it has proved to be the wrong one and in fact it has suffered more by being out in an exposed position than if it had been left in Stanley. There is also the qusetion of the divided responsibility for these lights which leads to difficulties. The vote for the erection of lights is controlled by the S/W (Head XVIII, (a), 5.), but S/W apparently expects this department to make out the indents etc. This is a little difficult in some respects, especially since the position has now become so confused that the final destination of the various bits and pieces has become obscure.

H.M.
12.8

P.T.O.

25

H.C.S.

Further to my minute above, as the P.W.D. is so short of labour at the moment, would it not be feasible to put the erection of the beacons at Cape Carysfort, Cape Dolphin and Fox Bay out to contract?

H.M.

12.8

Hdh.
~~800~~ 22.

We discussed.

a) b) c) Agreed – subject to a) of (21).

d) a) Cape Lancaster New light has been ordered – existing light wrongly landed to 10 to Ayax B.

e) Cape Dolphin: to be taken out when direction arranged.

f) Fox Bay light. Another light to be ordered & 2nd ~~light~~ (leading) light put on wireless pole. Existing light wrongly landed to 10 to Ayax Bay.

g) Ayax Bay 1. Lights (referred to above) to be taken out as soon as practicable.

2) We discuss the question of erection with Sec. who is asked to confirm that a) Cape Lancaster & b) Fox Bay another light have in fact been ordered.

He may do better to put works out to contract.

3) As regards incidents etc. for lights, it should be quite easy for you to advise & Sec. to order these lights without compulsion or friction.

JPS

21 S/W.

Pse see H.C.S's comments overleaf.

I can arrange for "Philomel" to collect Ajax Bay lights from Fox Bay & Cow Bay early next month & will go out with them & mark the sites where they are to be erected at Ajax Bay.

Cape Dolphin light could be landed during the same voyage if there is a reasonable hope that it will be erected in the near future.

You will know which lights have been indented for?

18. VIII.

Hon.
~~H~~ L.W.
~~H.~~

A

28

The attached letter has had to be held up for a month for the indents which have are still awaited despite repeated reminders.

H.M. is to supply particulars to the who will indent — the file is, I believe, with H.M.

Pse expedite.

9/9

B.

HCL

Indents have been prepared.

AJL
20/X.

1557.

10th August, 59.

Gentlemen,

I am directed to refer to the attached indent for a coastal light for Cape Caryafort which should satisfy the following requirements of the Elder Brethren, Trinity House:-

"The light should have a character of white, single flashing every five seconds, and a full 15 miles range."

2. In addition it is desired to introduce a red sector into this light to cover Volunteer and Granie rocks as shown approximately on Admiralty Chart No. 1534b attached.

I am,
Gentlemen,
Your obedient servant,

(Sgd) C. Campbell

COLONIAL SECRETARY.

Crown Agents for the Colonies,
4, Millbank,
London, S. W. 1.

A

29

S.W.

Ref. the attached: I have looked through the previous indents & I find that we have already ordered & received the Cape Carysfort light - indent 32/49, delivered by "Langton Grange" departing London 28. VI. '50.

We therefore require: -

(a) For Ajax Bay: -

1 300-mm lantern group flashing two every 15 seconds complete with sun valve.

6 accumulators to supply above lantern.

1 spare flasher for above lantern.

1 run of piping to suit 30 foot tower

We shall also require the tower - can this be produced from locally available material? approx. total cost of above £1080 f.o.b.

(b) For Fox Bay.

1 ~~2~~ Chance-Londex winker type lights

2 in number Type 147, one with red lens, ~~one with green lens~~ complete with batteries & containers.

I have no idea of cost, but I should think about £300 inclusive of freight.

2.IX.

B

Office B on 28 - pl. att. the Indents

20/X.

Indent at b. cover pl. Shd.

30

HCS

How does the Coastal Lights situation stand now? Has everything been ordered? Is anything here yet? How soon do we expect to get them installed.

2. I wish to discuss the Fox Bay proposals with HM

HM For early comments
26/10

MC. 19/X

J.W.

(30)

31

I had hoped that the matter had been cleared up in my (21) but I fear it hasn't, as the H.M. has now introduced the question of characteristics.

2) At cover is a self explanatory draft to Trinity House which I hope will resolve the matter.

3) Briefly

a) We have a 500 mm. light for Cape Dolphin but with characteristics different to Elder Brethren's suggestion (This was ordered long before their suggestion was received).

b) We have 2 300 mm. lights for Beach Point & Pumpkin Head whose characteristics may be too similar.

c) We have no light for Cape Cargofort but if the lights in b) are too similar and we have to order another, one of them has the requisite characteristics required for Cape Cargofort & will be suitable provided 300 mm. is sufficiently powerful there.

4) As regards installation

a) Lyax Bay is about to erect the 2½ sec single flash 300 mm. in that area when H.M. has flown out & pinpointed the site. The other

52

300 mm. must await the reply to 3 (b) above.

b) Cape Dolphin is ready for erection but SPW has been unable to get anyone to do it yet as it is an uncomfortable rock. Also we should now await a reply from Trinity House re its characteristics.

See I/250/53 - despatched 22/11/53.

5.) We have ordered one lantern for Knot Island Port Bay in accordance with (21).

23 Co

Chairman

Issue.

Mc 24
X

F.I. Ref: 1537.

33

Colonial Secretary's Office,
Stanley, Falkland Islands.

26th October, 1953.

178 & 239
m 64/45

Sir,

I am directed to refer to your letters Ex. 2109/1950 of the 17th of October, 1950, and the 17th of August, 1951, on the subject of the installation of coastal lights in the Falkland Islands.

2. Cape Dolphin.

Government possesses a 500 m.m. which it is proposed to erect here. Its characteristics are however single flashing every 15 seconds instead of group flashing (2) every 10 seconds as suggested by you and I am to enquire whether you have any objections on this account to our proceeding with the installation.

3. Falkland Sound.

Approaches to Ajax Bay.

Government possesses and proposes to instal two 300 m.m. lights with the characteristics single flashing 2½ and 5 seconds respectively. I am to enquire whether these will have too great a similarity and, if they have, what should be the characteristics of the second light assuming that the one with single flashing 2½ seconds is retained.

4. Cape Carysfort.

Including the tower this light will stand 200 ft. above sea level. I am to enquire whether a 500 m.m. light is required or whether a 300 m.m. light will suffice.

5. An early reply to these queries would be much appreciated.

I am,
Sir,
Your obedient servant,

(Sgd) C. Campbell

COLONIAL SECRETARY.

Secretary-General,
Trinity House,
LONDON, E.C.3.

Reply at 35

Ref. as para. 5 of 32 pl.

27.x.

A.C.S.

Ref. made. pl.
20/11/53.

30/12

Harbour Master -

Have you discussed the erection of Cape Dolphin light with Mr Andreason yet? I visited the area when on leave and the nearest landing point seems to be the sand beach a good mile down the west side of the point. I believe however that you could land stores on the point on a calm day but would still have to get your sand from the sand beach. Mr Cameron would be very unwilling to send a tractor there as the balsam bogs make it very rough for tractor operation — the alternative is? Farm cart?

Anyway Mr Andreason from his knowledge of the farm & sailing experiences should be able to give us the best advice.

There is also the question of a) shingle & b) fresh water for the construction gang.

23/11

W.C.S.

Andreason agrees that the small sand bay is the best place - I spoke to him some time ago. To avoid moving the heavy equipment far, however, it might be worth waiting for, say, one week to see if we could get alongside the point. The heaviest item weighs 8 cwt, which would be quite a load to get into a cart out there.

Shingle can be shipped by "Philanel" from Cijax Bay.

Fresh water? This will probably have to be brought in buckets from pools & ponds.

24. XI.

26/11

Bcc 18/1/54 DKM (mail)

BU 30/12 (mail)

35

Any further communication on this subject should be addressed to
THE SECRETARY,
TRINITY HOUSE,
TOWER HILL,
LONDON, E.C.3,
and the following letter and number should be quoted :—

Ex.2745/1953.

Telegraphic Address—
"DIOPTRIC, FEN, LONDON."

Telephone Nos.—ROYAL 6601-8.

Trinity House, London, E.C.3.

3rd December, 1953.

AIR MAIL

17 JAN

Sir,

33 In reply to your letter of 26th October, 1953, (Ref: 1537) I am directed to inform you as follows regarding the proposed coastal lights in Falkland Islands:-

1. Cape Dolphin

The Elder Brethren have no objections to the proposal to establish a light with a characteristic single flashing every 15 seconds in lieu of the group flashing characteristic previously suggested.

2. Approaches to Ajax Bay.

The characteristics, flashing every $2\frac{1}{2}$ seconds and 5 seconds respectively, are considered too similar for establishing in the approaches to Ajax Bay in the positions previously suggested unless the light in position 51° 30' 00" South, 59° 07' 00" West, is coloured red, in which case the characteristics are considered suitable.

The Colonial Secretary,
Colonial Secretary's Office,
Stanley,
Falkland Islands.

30/ ...

36

3. Cape Carysfort.

A 500 mm. light is required at Cape Carysfort to give the 15 mile range considered necessary.

I am, Sir,
Your obedient Servant,

J.M. Burleigh.

H.M.

For your obs. on 35-36. pl.

W.A.F.S.
26/1/54.

H.C.S.

1. Noted thg.

2. This means that we can go ahead with the Cape Dolphin light right away. Inter Coastal Trading Company may be willing to undertake this on contract, as they have very little work on hand at present. S/W has been unable to get anyone else interested. I have spoken unofficially to Mr Hardy about this & prepared the way for S/W to make formal approach.

Please speak

3. I suggest we indent for the necessary globe for our Ajax Bay light to make it red.

At once

4. A new light for Cape Carysfort will be required. Specifications as for the Cape Dolphin light, but with the approved characteristics of Cape Carysfort.

This should be ordered now

5. We shall require a large number of additional cylinders for these lights. I suggest an indent for a further 30 be sent with the indent for Cape Carysfort light unless, as I understand from H.E, there are cylinders at South Georgia which are no longer required there, in which case "Biscoe" can retrieve these.

Not cylinders – a complete light, I believe: it should have come back last trip.

22. 1. '54.

U.S.

(35) & (37)

Very.

We are progressing slowly & I do endorse Hon; recommendations. Will Y.E. approve Cape Dolph. contract to I.C.T. Co? I think it is the only hope – the Hardy claimed in S.A.C. the other day that they could do it.

Seaborne.

29

The Lights at "The Narrows" & Blanco Bay and the one at Fox Bay should be Chance/Wonder "Landex" lights, battery operated to save all this labour with carbide cylinders: they should be ordered for delivery on FIC chartered vessel I.e. ordered well in advance for direct shipment.

See back cover.

MC 30/1

38

HM (37)

Can you prepare minute (next mail) as in your 3 & 4 in consultation with Sec. + then return file early for me to discuss with HE. SF is arranging for lights & cylinders to come back from SG.

CR 22.2

CS

I spoke to Cdr. Ward about the Cape Dolphin light and he appeared quite enthusiastic — please consider the practical details with H/M.

MC. 9/11

The best thing, I think, would be to fit it in with his Camp tour after shearing.

Attached

I have considered with Adm. & a combined operation with Pheloneel will be necessary. The light could be landed about ½ mile from the site & it & material sledged up.

So I had supposed

2) I suggest I invite the Captain & his Engineer Officer to a meeting with Adm. & Sec. (with C. Andreason as to local adviser) & ~~he can~~ the Captain can decide if he can & will take it on.

All I think we will need from Mr Cameron is a horse sledge & carter. — or they may even be able to manhandle with sledge alone.

As in (2) please.

HC 19/..80

My impression is that most ships which come here are only too happy to find some useful way of employing their people.

F.I. Ref: 1537.

3

41

11th February, 1954.

Dear Ward,

His Excellency has, I believe, sought your assistance over the installation of a coastal light on Cape Dolphin and gathered that you would be pleased to co-operate.

If this is so I suggest that you may like to have a preliminary meeting with the Harbour Master and Superintendent of Works - and perhaps bring your Engineer Officer - to discuss details of the operation and the work involved before committing your-self in any way.

If you are agreeable I will ask the Harbour Master to arrange such a meeting at a mutually convenient time.

Yours sincerely,

(Sgd) C. Campbell.

Commander B.C. Ward, D.S.C.,
H.M.S. St. Austell Bay.

Copy to Harbour Master.

Bd. 18/2

Reply at 42

000

7 42

H.M.S. ST. AUSTELL BAY,

at Port Stanley,

Falkland Islands.

17th February, 1954.

Dear Campbell,

9-1

Reference your F.I. 1537 of 11th February, 1954, I would very much like a meeting to discuss the problem and would be grateful if the Harbour Master would arrange one at a time suitable to all.

Yours ever

Bert Warden

The Honourable Colonial Secretary,
Colonial Secretary's Office,
Port Stanley.

BWF

Nos. 39-42

~~(1-6)~~

FWA on ~~Hon~~ Warden return
Pse take the opportunity of the Cameron's presence to have a preliminary discussion with him.
22/2

H.C.S.

I have spoken to Mr Cameron regarding this & he has probably also discussed the matter with you.

His view is that the R.N. is quite incapable of undertaking this work – he feels the most we should expect of them is the landing of all equipment on the beach at Cape Dolphin. He does not consider that the construction should be entrusted to unskilled hands.

He will be unable to provide assistance in transporting the gear from the beach until May or June.

He suggests that the operation should be divided into three phases:-

(a) Landing.

(b) Transporting to the site.

(c) Erection.

These could be done at different times – (a) for instance could be carried out immediately by the R.N: (b) could be done by the R.N. later when convenient for his farm routine: & (c) he feels should be done by P.W.D. or experienced contractors.

I agree basically with his comments, but would also add that I do not feel that the time interval between (a) & (c) should be so great as to allow deterioration in the interval to the material. In consequence it will be necessary to have a firm date when labour for erection will be available before we commence landing.

24.11.54.

We are fortunate in having been able to get the Cameron views and this will help with your discussions with Commander Ward.

2) As regards his views on erection this will be for F.O. to advise when he knows what artisans the Navy would produce.

3) There is another factor – that Photomel will almost certainly not be available in May or June. You should check with F.O. but I imagine the hulks, Prop will take at least 4 months.

4) If the Navy cannot carry out the whole operation of landing, then Protector should be able to help. If the Navy feel ~~the job~~ the operation is beyond them ~~too much~~ we must think again.

5) When discussing with Captain Ward, you should ascertain before we commit ourselves, what charges if any he will make.

B 9/3

H.C.S./ S/W & self have discussed this with Cdr Ward, who does not consider this should be undertaken by the R.N during winter months owing to the discomfort to the shore party in bad weather with necessarily limited camping equipment. However, he wishes to fly out & examine the site personally, before committing himself to a firm opinion as to whether another ship can do the work later.

BU. 1 month.

15/4

15/5

No. 1537.

It is requested that, in any reference to this memorandum the above number and date should be quoted.

MEMORANDUM.

31st May, 19 54.

From: The Colonial Secretary,

Stanley, Falkland Islands.

To: The Auditor,

STANLEY.

SUBJECT :- Cylinders for Coastal Lights.

Very few of the coastal and harbour lights can operate or are operating through lack of cylinders.

From enquiries that have been made it appears that a number of cylinders on charge to the Harbour Department have been awaiting refilling in Montevideo for periods up to 18 months, others on charge to Public Works Department either await filling or are installed in existing lights.

Twelve are reported to have been sent to South Georgia some years ago but the Administrative Officer South Georgia in a telegram recently received only admits possession of one.

225 ~ F1X/77/I

I am to request that you will make investigations with a view to ascertaining

(a) How many cylinders should be owned by (1) Government
(2) F.I.D.S.

(b) How many are actually in Government and F.I.D.S. possession.

(c) Where are the existing cylinders located.

(d) How and where have any missing cylinders gone astray.

(e) Can the refilling delay in Montevideo be avoided.

(f) To which Department should the cylinders most appropriately be on charge.

C. CAMPBELL

Colonial Secretary.

Copies to Superintendent of Works,
Harbour Master,
Secretary, F.I.D.S.

AG
Send a reminder
Bell
26/6/54
2/7/54

COASTAL LIGHT BEACONS.

The position now is that all but one of the Coastal lights are in operation again: the exception is Cape Meredith which the "Philomel" will attend during her next voyage.

A good deal of maintenance work is essential to the beacon houses - the "Alert" is dealing with the Narrows lights - chipping, painting and repiping - and also Blanco Bay light. "Philomel" has attended to Ball Point and will do Cape Meredith. That leaves Mangeary Point, which is beyond the resources of this Department. The work involved consists of repairs to the iron structure and complete chipping and repainting. I am told that the last time this was carried out a party of contractors camped on the site to do the work. Something similar will have to be done again, but with the vast amount of other work being undertaken at present I doubt if we should get any contractor to undertake the work - certainly not during the summer months which are the best for the painting. Two other possibilities occur to me: give the job to P.W.D. labour on contract or try to get the Marines interested. Grateful for your opinions on this.

I also want to get the navigational beacons repainted this summer - the "Alert" can do the two in Port William on Yorke Point and Charles Point, but I think it would be easier to get the P.W.D. to attend to the guide marks on the southern shore of the harbour below the new Wireless station.

If it is found possible to keep the lights serviced throughout the summer months I would like to establish the light on Cape Carysfort early next year. This light will be the most most easy to maintain and also useful to the "Fitzroy" when approaching from Montevideo. I think we should start with the easy one and work up to the difficult, and Cape Carysfort could be erected by P.W.D. labour on contractors without a great deal of difficulty. After that we ought to do Fox Bay lights and then dwell a pause to see how we get on with keeping that lot going - I do not want to be rushed into putting them all up at once because I am certain if we do so they will only go out again!

The cylinder situation is being cleared up gradually: the Auditor discussed this with me recently and there are now only two outstanding queries - 4 cylinders are 'lost' in Montevideo and correspondence is proceeding between this Department, the F.I.C. and Holman and Stapletons in an effort to trace these. The exact number of cylinders at Cape Meredith is not known; this query should be settled after "Philomel's" visit.

Buf.

No.

It is requested that, in any reference to this memorandum the above number and date should be quoted.

MEMORANDUM.

20th December 1954

To: The Honourable,
The Colonial Secretary,
Stanley.

From: The Auditor.

Stanley, Falkland Islands.

SUBJECT :- Cylinders for Coastal Lights.

With reference to your memo. No. 1537 of 31st May, I have now completed investigations into the whereabouts etc. of lighthouse cylinders and submit the following information.

a) No amount of research will reveal how many cylinders should be owned by Government or F.I.D.S.

b) An inventory taken recently reveals that there are 75 full or empty cylinders in Government or F.I.D.S. possession.

c) These are distributed as follows:

South Georgia	1.
Deception Island	15.
Navy Point	1.
Engineer Point	2.
Blanco Bay	1.
Mangeary Point	6.
Cape Garysford	6. (not in use)
Porpoise Point	5.
Cape Meredith	8.
Ajax Bay	5. (not in use)
Montevideo	3.
Harbour Dept. Warehouse	22.
	75.

d) Five cylinders were lost overboard off Mangeary Point and the return of four from Montevideo is long overdue. An uncertain number, believed by Capt. Johnston to be about 20, can be seen in the water below the light at Deception Island. How they were lost is not known.

e) The refilling delay in Montevideo appears to have developed quite recently (i.e. during the past year or so). Records from 1945 onwards show a regular flow of cylinders to and from Montevideo; the freight bill for cylinders from Montevideo follows that for the northbound account by about three months.

The only alternative to filling in Montevideo would be to send the cylinders to the U.K. as F.I.D.S. do. Because of the distance

involved this would not appear to solve the delay problem and freight charges would be greatly increased. F.I.D.S. of course, send their cylinders by the "John Biscoe" and as this opportunity occurs only once a year they need a greater reserve of cylinders. If the Colony adopted this method there would be need for an increase in the total number of available cylinders. (According to the Harbourmaster the "life" of a cylinder of gas is between 2days and 3months)

It would appear that too many empty cylinders are being accumulated in Stanley. The last freight account (Oct. 1954) for cylinders sent to Montevideo covered a shipment of 21- roughly a third of the Colony's total cylinder strength. The previous shipment was made in April or May.

f) Neither the P.W.D. nor the Harbour Dept. have the cylinders on charge. (prior to your memo. under reference). The Harbour Dept. which is responsible for the maintenance of the Colony lights should take on charge 50 and keep a chart showing their distribution. F.I.D.S. should look after the cylinders belonging to Deception Island light and any other lights that may be erected in the Dependencies;.

L. Clement
Auditor.

BWF

KM 51-55.

1537.

51

29th December, 54.

To: Harbourmaster,

From: Colonial Secretary. STANLEY.

55

Cylinders for Coastal Lights.

I am directed to forward a copy of a Memorandum prepared by the Auditor on the subject of Coast Light Cylinders and to request you to take on charge the 60 cylinders. You should arrange with the Secretary F.I.D.S. for the return of the cylinder from South Georgia by the R.R.S. "John Biscoe".

2. I am to enquire

(a) Whether you consider that the number of cylinders is now sufficient for all existing lights and for the proposed lights at Cape Carysford and Fox Bay and

(b) What method of refilling you propose to adopt.

(Sgd) C. Campbell.
Colonial Secretary.

Copy to Secretary F.I.D.S.

CC/JC

H.C.S.

Damage to Navy Point Light Beacon.

The flasher in the Navy Point Light Beacon has been damaged & it will be necessary to send the unit to the United Kingdom for repair. Unfortunately these units are sealed by the manufacturers to prevent tampering by unqualified maintenance staff, & in consequence it is impossible to ascertain the exact cause of the failure. However it is suspected that the sensitive spring controlling the fuel supply to the burner has been damaged.

The cause of this defect is unknown, but it occurred the night after a naval shore party had detonated an explosive charge (believed to be 25 lbs T.N.T.) within a short distance of the beacon (approximately 70 yards).

When the original request to detonate this charge was made to you, I asked that the Navy be requested to do so at a safe distance from the beacon & I also understood, possibly erroneously, that it was only intended to use a small charge. Not only was the charge bigger than I anticipated, but it was also much nearer to the beacon than what I would describe as a "safe distance". I would therefore be grateful if you could enquire whether the Navy are willing to accept responsibility in this matter should the repairs in England show that the damage could have been caused by their explosion. The total cost of repairs is not expected to exceed £20 including freight both ways. In view of this comparatively light cost, I hope it will be possible to arrange this with the Navy in an amicable fashion. I imagine the Commanding Officer will be very reluctant to accept any responsibility, for it will look very bad if he has to include in his accounts an item "repairs to lighthouse, blown up by mistake"! To avoid having to do this, he may prefer to donate paint, wire or rope to this department to the value of the repairs!!

J.L.

See 56

18371

For filing.

~~56~~ 59

6th January, 1955.

Dear Pat,

Ack. 55

I enclose an extract of a report furnished by the Harbour Master on the subject of damage to Navy Point Light Beacon and would be glad to know if you would accept liability in the event of investigation showing that the light was probably damaged by an explosion.

If so, I suggest we discuss what is to be done. If, as I suspect, assumption of financial liability might cause you embarrassment out of proportion to the cost of repairs some mutually satisfactory quid pro quo arrangement such as blasting stone for us elsewhere might be arrived at with you or your successor!

My recollection of the incident is that I was given to understand that the charge would be about 1½ lb. and I agreed to the operation provided no damage was done to the Harbour lights.

Yours sincerely,

(Sgd) Colin

Commander D. R. P. Lawford, D.S.C., R.N.,
The Commanding Officer,
H.M.S. Veryan Bay.

CC/VP

Reply at 61

HM.

(54)

60

Pse discuss early with Sec. & let me have your joint recommendations. I think we should put the repairs to Mergueey out to contract & only by navy as a last resort. Work on purely marks depends on Sec. views.

2) As regards establishment of new lights — you cannot get on with Cape Lazy sport since at (35) Elder Brethren say it must be a 500 mm. light. The only 500 mm. we have is can marked for Cape Dolphin but you may think it advisable to ~~both~~ switch it to Lazy sport in view of constructional difficulties at Dolphin. What are your views?

3) You mention Fox Bay lights. We are only erecting one winter type harbour light on Knot Island. Has it arrived — since I note at (32) that it had been ordered?

4) I presume there is now no hope of getting Freezer to erect either the Wreck Point or Pinning head light — they have a skeleton crew & no boats. How do you suggest we get these erected? on ~~[illegible]~~

5) My inclination is to establish Lazy sport with the Dolphin 500 mm. light & the Fox Bay winter light & then pause

28/02

Recalled By H.O.S.

H.M.S. VERYAN BAY,
at Port Stanley,
Falkland Islands.

21st January, 1955.

A

Dear Colin,

Thank you for your letter of 6th January concerning damage to Navy Point Light Beacon.

I regret that the explosion was larger than I informed you that it would be. The actual distance was 100 yards. From the position of the explosion, Navy Point Light would have been screened from blast effect and as there was little tamping, most of the force of the explosion was upward. I understand there was no earth tremor.

I myself observed the light working the following night. However if subsequent investigation shows the light to have been damaged by shock, I fear it must have been our fault.

I am grateful for your suggestion in paragraph 2 of your letter and as blasting would give my demolition team some much needed practice, I have instructed my demolition officer to get in touch with Mr. Livermore and work out a programme.

Yours sincerely

The Colonial Secretary,
The Falkland Islands,
Port Stanley.

B

C

H.C.S. Noted. may we speak? I understand tubing fa

-the lights is now being used as scaffolding by P.W.D. !!!

20.11.

Hm.

Pl. bring this ~~[illegible]~~ file along the next time you come on ~~[illegible]~~

26/4.

63 = [illegible] removed to File 1/1/II

Recalled for tl.
29/4/55 SM.

1537

63

: Harbour Master.

To: The Hon. Col. Sec.
STANLEY.

14 OCT 1955

14th October, 1955.

A.I.S.E. FOR MAINTENANCE OF LIGHTS & BEACONS.

I regret to inform you that my estimate for the maintenance of lights and beacons for the current financial period is going to fall very far short of the required sum.

2. The reasons for this under-estimation are as follows:-

(a) In the past it has not proved possible to maintain the coastal light beacons properly owing to other commitments. The situation has improved somewhat this year (although it is still not satisfactory). Among other things achieved are:-

(i) The re-painting of all the beacons in the approaches to Stanley Harbour, including that at Memgeary Point.

(ii) The almost continuous operation of these beacons.

(iii) The establishment of a further beacon in the approaches t Fox Bay.

(iv) The servicing of Bull Point Light.

(b) A marked rise in the cost of re-filling cylinders in Montevideo. As an example of this, 8 cylinders were returned to the Colony on the 3rd of July, 1954, and the cost of re-filling (exclusive of freight charges) was £24 / 7 / 3. This amounts to about £3 / 1 / - per cylinder.
3 cylinders returned to the Colony on the 5th of December, 1954, cost £23 / 14 / 10 for re-filling: this works out at £7 /18 / 3 per cylinder - a rise of well over 100% on the price only five months earlier. As a matter of fact, I ignored this rise when making out estimates, as the account was sent back to the F.I.C. for checking - such a rise seemed hardly possible. However, it has now been confirmed by subsequent accounts.

3. In view of the above, it has been found necessary to submit the attached A.I.S.E..

4. However, I think it would be only fair to emntion to the Members of S.F.C. when requesting this sum that if the lights are to be maintained in proper running order, the cost next year when all are operating may easily amount to £750. Maybe they may then wish to reconsider the whole policy of coastal lights, for I very much doubt if we obtain that value from the lights.

5. The light established at Fox Bay is of a new type, which, if successful, could replace the Narrows and Blanco Bay beacons, and be much more economical. It will require a twelve month test period however, before its successful operation can be ascertained.

Harbour Master.

64

MCT Re. Lighthouse meeting of SFC

From: Harbour Master. To: The Hon. Sol. Gen.
SYDNEY.

14th October, 1955.

A.I.S.A. - ESTIMATES OF LIGHTS & BUOYS.

I regret to inform you that my estimate for the maintenance of lights and beacons for current financial period is going to fall very far short of the mark this year.

2. The reasons for this under-estimation are as follows:-

(a) In the first it has not proved possible to maintain the coastal lights because presently owing to other commitments. The situation has improved somewhat this year (although it is still not satisfactory). Among other things we have also:-

(i) The re-painting of all the beacons in the approaches to Sandy Harbour, including that at Longcary point.

(ii) The almost continuous operation of three beacons.

(iii) The establishment of a further beacon in the approaches to Fox Bay.

(iv) The servicing of Bull Point light.

(b) A marked rise in the cost of re-filling cylinders in Portavidco. In my schedule of this, 8 cylinders were returned to the colony on the 3rd of July, 1954, and the cost of re-filling (strictly of freight charges) was £34 \ 7 \ 3. This amounts to about £3 \ 1 \ - per cylinder.
I returned to the colony on the 5th of December, 1954, 21 cylinders at a cost of £23 \ 11 \ 10 for re-filling; this works out at £7 \ 10 \ 3 per cylinder - a rise of well over 100% on the price only five months earlier. As a matter of fact, I ignored this rise when making out estimates, as the account was sent back to the A.I.S.A. for checking - such a rise seemed hardly possible. However, it has now been confirmed by subsequent accounts.

3. In view of the above, it has been found necessary to submit the attached A.I.S.A.

4. However, I think it would be only fair to mention to the members of the A.I.S.A. that in the meeting this year it was felt that if we are to be maintained in proper working order, the cost next year will be considerably greater than £1750. Have they any idea what to expect? I would like to know the whole policy of coastal lights, for I very much doubt if we obtain value from the lights.

5. The light established at Fox Bay is of a new type, which, if successful, could replace the Harrow and Simon Bay beacons, and be even more economical. It will require a twelve month test period however, before the successful operation can be ascertained.

Harbour Master.

APPLICATION TO INCUR SUPPLEMENTARY EXPENDITURE.

Head No.	Subhead No.	Subhead Description.	Amount.	Reasons. (may be continued overleaf)
H.& A. VI	6	Upkeep of Lights & Beacons.	£400	See attached Memorandum to H.C.C.

Savings of £ NIL under Head ..... Subhead .....

Signed .....

Harbour Master.

Date 14.X.35

From: Harbour Master. To: The Hon. Col. Sec.
STANLEY.

19th October, 1955.

HARBOUR AND COASTWISE LIGHTS.

In the past you will find there have been various discussions between your predecessors and myself concerning the state of the harbour and coastwise lights in the Colony.

2. To save you having to read through a somewhat lengthy file, which could be better headed 'Order, Counter-Order, Disorder', I will outline the situation as I have seen it in the past and then make suggestions for the future.

3. At the outbreak of war the coastal lights were switched off for security reasons, and although repeated efforts have been made to put these into operation again since 1945 (one month was spent by R.R.S."John Biscoe" when commanded by a Younger Brother of Trinity House) these have never proved entirely successful, and up to now there has never been a night on which all the lights were working simultaneously. Despite this somewhat gloomy record of maintenance, I have been constantly pressed to erect more lights in the Colony. I have, as you will find in the files, always maintained that the first step should be to get the existing lights operating, and although this reasoning was not accepted, I have on various excuses managed to stave of the evil day of having to erect further lights - it was perhaps as well that I did, otherwise Ajax Bay would be bathed in the glow from two completely useless but very expensive beacons at present!

4. I am now pleased to be able to report that after the Cape Meredith light is lit by "Philomel" on the next voyage, all the lights will have been serviced and in operation, and in addition a light established on Knob Island in the approaches to Fox Bay. The lights operating are:-

Cape Pembroke	Manned lighthouse.
Memgeary Point Blanco Bay Navy Point Engineer Point	Beacons in approaches to Stanley Harbour.
Bull Point Cape Meredith	Unwatched coastal beacons.
Knob Island	Beacon in approach to Fox Bay.

5. It was proposed also to establish lights at:-

Cape Carysfort
Cape Dolphin
Fanning Head
Wreck Point

The last two of the above are approach beacons for Ajax Bay, and may now be forgotten. During my training period in England, the Acting Harbour Master landed a light at Cape Carysfort. Unfortunately he omitted to make any arrangements for its erection, so this beacon became buried in the sand in a few months, and it will now be a major work to recover it. It has subsequently been ascertained that in fact the wrong light was landed at Cape Carysfort in any case, so perhaps it is as well that it was not erected!

Cape Dolphin light is beyond the powers of the Harbour Department to erect: P.W.D., with its many other committments, cannot undertake the task. Mr Campbell proposed that it should be done by a visiting frigate, but this scheme has never been put into practice and to me it does not appear very practical. However, you may wish to pursue the matter further. When last sighted, the frame of this light formed the scaffolding for the new oil tanks at the Power Station incidentally, so it may not be easy to get all the bits

and pieces together again - I would certainly suggest that this is don before any approach is made to the Royal Navy.

6. I am reasonably satisfied that the existing lights can in future be maintained in effective operation, but to do so will be a costly operation. To start with, these beacons (with the exception of the new one at Knob Island) are all old-about thirty years old. They are in poor condition and require a large number of spares which are very expensive. The effective maintenance of the existing lights will tie up the "Philomel" for approximately 50 days per annum, and if Cape Dolphin and Cape Carysfort are added a further 30 days will be required, meaning that the ship will be wanted for three months per annum on that work. The cost of gas for the lights has already been drawn to your notice, and with the two additional lights in operation when erected, it cannot amount to much less than £500 per annum - this figure is for the gas alone - it does not include other maintenance costs. Reviewing therefore, we find:-

63

"Philomel" operations	say £1,400	(running costs)
Gas	500	
Spares	200	
Paint	50	
Sundries	50	
TOTAL	£2,200	

If anything, I have probably erred on the conservative side in the estimate above: for instance, the price of gas may still further increase.

7. I consider this cost should be cut. Now we have the existing lights operating I suggest that a conference on policy should be held with the following members:- yourself, myself, the Commanding Officer of an H.M.Ship, Captain White and a member of the S.F.C. The following subjects should be on the agenda:-

(a) Whether, in view of the cost, the continued maintenance of Bull Point and Cape Verdith lights is justified.
(b) If it is considered justified, is the erection of the further two lights at Cape Dolphin and Cape Carysfort justified.
(c) To consider the possible replacement of the Stanley Harbour approach lights by a battery type such as is installed at Fox Bay, subject to a twelve-month satisfactory trial with that light.
(d) To consider whether a high-powered light is necessary at Mengeary Point, or whether a lower-powered battery light could be installed there also.
(e) If the answer to (a) and (b) above is in the affirmative, to consider ways and means to maintain these lights as cheaply as possible, and also, in the case of (b) to consider how the lights are to be erected.
(f) In the words so often heard on the local radio - "Any other business".

8. It is obvious that I hold very definite views on this subject: I have personally sailed around these coasts for nine months, frequently at night, and during that time I never depended upon the lights since I could never be sure whether they would be operating. I have always persisted that an unreliable light is worse than no light at all since it is likely to lead the unwary navigator into difficulties. For that reason, until adequate maintanance could be organised I was opposed to further extending our committments. It is now clear what can be done, how it can be done, and what it will cost The question is, is it worth it?

Harbour Master.

KV 66

(10)

7. H

65-66 submitted.

Although this is a matter for decision in Ex. Co, I see no objection to an early discussion as suggested in para 7 omitting the member of S.F.C. who is not concerned in a matter of policy

C.S.

1. This is a helpful and constructive memorandum.

2. I agree that there should be a preliminary technical and administrative conference with

C.S.
H.M.
C.O. or Nav. Off. or both of the warships
Captain White Circulation Off. S. Col. Mer. F.C.

on the first move - next time the Fitney is in. This probably to Exeter.

What I should like to know as a preliminary before the conference is

1. Cost of Purchase - Cost of Freight - Cost of Erection - Cost of Maintenance of the gas lights.

2. Cost of Purchase - " " - " - " " of the low powered battery light. - work

under these headings - (figures approximate.) of each light.

C.C.J.S.
7.4/5.

68

H.M.

Pl. submit the costs as at

X 967.

H. 4/x

S. of P.W.

As the votes are controlled by you, could you let me know what was:-

(a) The cost of the last battery-operated light received in the Colony (arrived last year or beginning of this)

(b) Freight charges on above.

(c) The cost of the last gas-operated light received in the Colony (arrived two or three years ago, I believe).

(d) Freight charges on (c) above.

(e) What you estimate it would cost in labour & materials to erect (c) type at Cape Dolphin & Cape Cangsfat, using local labour. For your information, gangs would have to live in tents on site and reaching the site by boat could not be done daily – in fact one day in seven at both places might be over-optimistic!

HM

As requested.

A. £89-0-0.
B £1-5-1 } are below.

C & D £3445-11-6.

It is impossible to estimate cost of erection I do not know the places at all. The ground could be solid rock or hard which makes a vast difference. To be on the safe side I would [illegible]

H.C.S.

Costs required by H.H's minute: -

(a)	Cost of purchase & freight of most recent gas light	£3445
	Cost of erection (estimated by Supt. P.W.D.)	150
	Cost of maintenance (12 cylinders p.a.)	95
	Attendance by 'Philomel' (say 7 days p.a.)	280
(b)	Cost of purchase of battery light	£ 89
	Cost of freight	1
	Cost of erection (done by 'Philomel's' crew in 1 day)	40
	Cost of maintenance (can be done by farm)	5

H.C.S.

I will arrange to discuss this matter with H.M. & C.O. (on navigation of the Protector) and White of the Fitzroy to (on Bunton) when the Protector returns.

In the meantime pl. ask H.M. to discuss with Capt. White when he gets him and get his general views.

C.G.F.
9/xi

H.M.

Accy. pl.

9/xi.

14/xi

H.C.S. Capt. White wants to think it over before committing himself — I've written to him privately (copy attached) explaining my views.

70

B.G. when ~~Hons~~ Fitroy on Protector returns to Stanley.

C.J.J.T.

14/XI

71

10th November, 55

Dear Freddy,

As you know the state of the Coastal Light Beacons has been bad for a large number of years. This year we have made an effort to clear it up somewhat, and the situation at present is that all the lights in the approaches to Stanley are operating (and have been for some months); Bull Point and Cape Meredith have been serviced, but require relighting - this would have been carried out on "Philomel's" last voyage but for unforeseen calls in other directions. However, on her next camp voyage it can be done. A small experimental battery light has been established on Knob Island in the approach to Fox Bay, and I would be grateful if you would let me know in due course whether this is of any use to you.

2. Now it is known roughly what is required to maintain these lights, I have asked the C.S. to agree to having an unofficial meeting of interested persons to discuss future policy for the coastal lights. The following have been suggested as members:- yourself, the C.O. "Protector", the C.S. and myself. To put you in the picture about what we shall have to discuss, the following may help.

3. Present Policy.

The first thing is to get the existing lights in operation and to put the beacon on Knob Island (the latter has been done). After that beacons were to be established on Cape Dolphin, Cape Carysfort and the approaches to Ajax Bay. I think it can safely be assumed that the Ajax Bay lights will not now be established, although no directive has yet been made on this point.

Reply on 77

4. Future Policy.

Before anything further is done to implement the present policy it has been agreed to discuss the matter as mentioned above. My views (for what they are worth) are that no lights at all are better than unreliable lights: therefore, until we can adequately maintain the existing lights no further lights should be established in the Colony. It has also been found that proper maintenance of the existing gas-type beacons is a very expensive business, and if the two extra beacons are put up at Carysfort and Dolphin it will amount to well over £2,000 per annum. For the use obtained from these lights I doubt very much whether this is worth the expenditure involved, although you would be a better judge of this than me. I personally favour eliminating all gas-type lights in the camp - that means Bull Point, Cape Meredith and Mengeary, and replacing Mengeary and the approach lights to Stanley with battery-type lights which are easier to maintain and cheaper. It would mean of course that Mengeary light would have a very much reduced range, and I would like your opinion on whether this would matter very much or not.

5. I have attached the actual suggested agenda for the meeting for your information: under the heading of 'any other business' it might be worth your while to bring up the question of the establishment of more leading lights at other settlements like the one at Fox Bay. They are fairly cheap, and personally I think they will be of more use and less trouble to us than the bigger gas beacons. But I leave that to you: naturally, you will approciate that beacons near settlements can be fairly well maintained by the settlement itself, and so they should be much more reliable than the present beacons.

6. While writing to you on the subject of navigation-

73

opinion about: there may be a spare radio beacon available to the Colony from South Georgia this year. This has a frequency range of 200-415 kc/s. If it is available, do you think that it would be of any value here? "Fitzroy" and her successors would be the main users, so it would be up to you to decide where it could be placed to most advantage in the Colony. Is the "Fitzroy's" successor fitted with D/F capable of using this frequency: if so, please let me know if you think the beacon would be worth pursuing.

Yes

B.U. 5/12/55 see 70

I has no time to deal with the now

B.U. after Lgto. or when a reply from Capt. White is received.

6/12

B.U. 17/12/55

H.C.S.

Have you heard anything yet.

H.C.S. No reply yet. B.C.

No B.U.

B.U. 15/1

16/1

1537

74

FROM THE SECRETARY OF STATE FOR THE COLONIES

C.O. Ref: COM 229/01

SAVINGRAM

CIRCULAR 1308/55

31st December, 1955.

MICROWAVE HARBOUR BEACONS

In reply to a Parliamentary Question on the 2nd November the Minister of Transport and Civil Aviation gave some information about a new radio device which had been developed by the Ministry's scientific group at the Admiralty Signal and Radar Establishment.

2. Following is a description of the device:

The system is an adaptation of the old Lorenz type of landing aid for aircraft and consists of a 3 cm. radar type transmitter mounted at a harbour entrance and radiating from two aerials which have overlapping beams. This beacon may have a useful application in any harbour where there will be value in marking positively in all states of visibility a sector 1° wide to a distance of 7 miles from the transmitter. The transmitter is so sited that the line of intersection of the two beams is along a safe course line for entering harbour.

The output of the transmitter is switched in turn to each of the aerials in such a sequence that the morse letter B (-...) is transmitted from one aerial and the morse letter V (...-) from the other aerial. The characters of one letter are transmitted during the period of the space intervals between the characters of the other letter with the result that along the line of intersection of the two beams, where the amplitude of the signals from each aerial is equal, a continuous signal is received. Any other complementary morse letters may be used in place of B and V and by this means identification of a particular transmitter can be achieved.

/The

The Officer Administering
The Government of the
Falkland Islands.

KIV BU
on 73

75

The ship's receiver is a pre-tuned crystal receiver coupled to a small horn aerial. The receiver and its power supplies are built around the horn, measure 4in. x 5in. and weigh $4\frac{1}{2}$ lb. The power supplies are provided by a $4\frac{1}{2}$ volt flashlamp battery. An improved model of the receiver is supported on a rotatable searchlight mounting. This is intended for fitting through the wheelhouse roof of a small boat. The output of this receiver is brought out to a 'phone jack on the rotating arm into which a loudspeaker attachment may be plugged.

The trials and demonstrations of the apparatus have been carried out at Fraserburgh and Arbroath and the equipment operated very satisfactorily out to a range of approximately seven miles from the harbour.

Further improvements may be made to the equipment in the course of commercial production such as visual indication of sector or visual identification of a particular transmitting beacon. The equipment is not yet marketed but plans for its production are being considered by a number of radio manufacturing companies.

3. Preliminary reports suggest that when the equipment is in production the shore station will be priced in the region of £750 and the receiver £70.

4. It is believed that the system may be of interest to maritime territories where the shipping movements are insufficient to justify the provision of more elaborate and expensive navigation aids. In particular, it should meet a need for a navigation aid for craft which are too small to carry the normal ship borne radar or where funds do not permit the fitting of such equipment.

5. I shall be glad to obtain any further information about the device which may be requested.

6. This circular has been addressed to all Colonies, (including the Federation of Nigeria), Protectorates, and Regional Organisations except the Regional Governments in Nigeria, Northern Rhodesia, Nyasaland and the Commissioner General for South East Asia. It has been sent to the High Commissioner for the Federation of Malaya under cover of a separate despatch.

SECER.

Copy sent to:- Ministry of Transport and Civil Aviation.

Hm.

To see 74 PS Rm for Ag CS 3/2/56

H.C.S.

Noted thg.

H.C.S.

Grateful yr. instructions on 71 as we appear to be filing file with no hope of reply?

WH 13/2

Refer to Hm. on his return.

15/2. BU 21/2 H.

Hm

71. Have you received a reply pl.

WH/CS 21/2/56

H.C.S.

Please see attached.

77

R.M.S. "Fitzroy".

16th February, 1956.

Dear John,

71

I refer to your letter to me dated 10th November last; the possibility of a spare radio beacon being available from South Georgia.

I think a radio beacon would be of considerable value when approaching Stanley. "Fitzroy" was at one time equipped with D/F, but this was later placed on board the first "Lafonia" and left the Colony in that vessel. s.s."Darwin" will be fitted with D/F, and also radar I understand, but radar is not entirely trouble-free and D/F would be a very good second string. I could certainly have done with some D/F on my last voyage; 250 miles with visibility at no more than quarter mile, eventually having to make Stanley in the middle of the night on echo-sounder alone.

The frequencies you mention, i.e. 200-415 kc/s, are, I think, the normal D/F frequencies in international use. You could check this with Mr.Mercer. The best site in my opinion would be at Cape Pembroke lighthouse. Using this site I think the best available balance between usefulness to navigators and maintenance would be struck. Of course I do not know whether the beacons require much maintenance. If not, then perhaps some other site in the Stanley approaches would prove better, but I doubt whether Cape Pembroke site could be greatly improved. This site should give reasonably accurate D/F coverage through the arc 354° through east to 240°, thus covering practically all approach (direct) routes to Stanley, although not covering the northern approach too well. Volunteer Point would cover the northern approaches well, but gives poor coverage to southern approaches, and that at greatly increased maintena problems.

I think the D/F beacon would be a navigational asset, and the South Georgia one well worth pursuing, but be sure that it is the normal international frequency.

Apologies for the delay in answering your letter, but I was waiting to hear further from you regarding the meeting to be arranged concerning the lights.

Yours sincerely,

Freddy.

Bill on Hols 5 or 11/2 relev 8/3

s.s. "Fitzroy".

The Hon. A.G.Denton-Thompson. Esq. M.C.
Colonial Secretary.
Stanley,
Falkland Islands.

30th July, 1956.

Dear Sir,

41 x 77

Some time ago Mr.Huckle, Harbour Master, wrote to me concerning the possibility of a spare, new radio beacon, lying unused at South Georgia, being made available to the Colony. I replied, but have heard nothing further. This radio beacon could be of considerable benefit to vessels making Stanley, and I suggest that its installation be given serious consideration. In my opinion Cape Pembroke would be the most suitable site giving ease of maintenance, and best accurate coverage.

I have recently discussed with Mr.Mercer the prospects of obtaining better radio-telegraph service between shipping and the Stanley W/T Station. I fully appreciate that staff shortages, lack of equipment, and other factors influence the service at present. At present "Fitzroy" has two schedules daily with the Station when coasting, and three schedules daily when on ocean passages. At times other than these schedules it is practically impossible to establish W/T contact which, in the event of an accident, or emergency, is a very unsatisfactory arrangement. Mr.Mercer has certain ideas for overcoming this situation in the near future. I would be most grateful if you could take this matter up with him.

Yours sincerely,

J.W.Whitt.
Master.

CC.Manager F.I.C.
File.

Cfm
1) Acknowledged 31/7.
2) [illegible]

ACS

1. What is the position with regard to the radio beacon in S. G.? One was installed – of which there is another one that is awaiting installation when experience of the existing one has been obtained.

2. Please get Capt. P. & T.'s written comments on the proposal.

R.G.H.T.
11.7.56.

S. & T.

Para 2 for your obs pl.
D. Rinfoed
13/8/56

Hon CS

Para 2 of 70. Capt. White spoke to me about services of Govt. WT Station to meet emergencies of Ship Services. I informed him PC had in previous years intended getting an Auto-alarm fitted but a difficulty arose through the operator being nearly a mile away from the station and the auto-alarm was designed to operate when the operator was off watch but within easy calling distance from the WT office. GPO advised it was a device designed for Ship to Ship use and would present difficulties under our conditions.

We are not able to provide a listening watch for ships on 500 Kc/s due to staff ~~difficulties~~ but should FIDS and Govt. Station combine service it may be possible to arrange Loudspeaker watch using both staffs. When the two units are working together I propose to try it out: subject of course to your approval.

AH. SPT
13.8.56

GJd

80. Radio Beacon SG. The last word from AO is at para 4 of 248 in FIDS 77. It is presumably in store at Stanley.

DL 14/8/56

A.C.S.

Would you look up the cost of the beacon and discuss with me the full implication – especially of 7/248 on 77 – e.g. will the Darwin have the radio equipment to pick it up?

[illegible]

20.8.56

Office

Find me the cost of Radio Beacon pl.

DL 22/8/56

ACS

Cost of Radio Beacon SG is approximately £2,250 (pl. see p. 83 in Fids 77/Vol. I)

JR 13/9/56

S.P.&T.

above for your comments pl

DL 13/9/56

Hon Col Sec,

The frequency of the Radio Beacons at SG is in the Medium Band and will not present any difficulty to ships fitted with Direction Finding equipment.

I cannot understand XI at 248. since the Beacon has no High frequency range at all, but ~~should~~ does provide a useful medium range of some 100 miles. on 302·5 Kilocycles.

It has been proposed, subject to approval of course, to fit the Beacon at Cape Pembroke where it will give the most useful service.

It could perhaps be installed in a room already there? but would require an engine house + Battery room.

Which Capt. White (and ~~FIC~~ "Darwin" will have but SP&T has not had confirmation from FIC.

£2,250 (83 in FIDS 77/I)

82

The mast & aerial arrangement could be similar to the picture at 82 Feds/77 Volume II.

The engine would require a supply of gas oil & lubricant and it would be necessary to ensure a sufficient supply was always available. From what I can see in the paper we would have to buy about 120 gallons gas oil annually say £10 to £12. Other stores may cost an equal amount.

It would be a ~~[illegible]~~ much better maintenance problem at C.P. since there is always ~~[illegible]~~ someone stationed there and defects could be attended to without serious delay.

I think S.G. has had so much trouble, initially in any case, because the gear was not fitted as required by Marconi and a diesel mechanic carried out the installation without the assistance of anyone experienced in Radio service.

AM, SPT
14. 9. 56

83

21st September 1956

Dear Mr. Barton,

79

On July 30th, Captain White wrote to me about the possibility of utilising the radio beacon which is at South Georgia and which has not yet been erected.

We have gone into this question and it seems that the equipment in question would probably serve a useful purpose here, especially when the "Darwin" comes into service. It will, however, be necessary to purchase the beacon at an approximate cost of £2,250 from the South Georgia Administration if it is to be used in the Colony. In addition, of course, there are erection and maintenance costs, the latter being fairly reasonable.

A decision has yet to be made whether the beacon, which was originally purchased as a second beacon for South Georgia, should be erected down there and in fact we have been waiting for one or two seasons' experience of the existing one before making a decision.

I am, however, advised by the Superintendent of Posts and Telegraphs that the South Georgia beacon, which is in the medium band, will not present any difficulty to ships fitted with direction finding equipment. I shall be going down to South Georgia in November and propose to consider the question as to whether or not the spare beacon should be erected there after discussing the matter with the Administrative Officer and the whaling managers. In the meantime, however, it is important to know for certain whether or not the "Darwin" will be fitted with direction finding equipment since it is for the benefit of the "Darwin" that the beacon would be principally required. Do you think therefore that you could find out for us definitely and confirm that the "Darwin" will have direction finding equipment. If so, and if the spare beacon is not to be erected in South Georgia, we have in mind buying it and putting it up at Cape Pembroke, subject, of course, to the approval of the Legislature.

Yours sincerely,

A. G. D.T.

The Hon. Mr. A. G. Barton, C.B.E., J.P.,
Colonial Manager,
Falkland Islands Company, Limited,
STANLEY.

AGDT/MC

S.P.T.
J. i. P.
22/9.

Reply at 85.

HCS
Seen. Thank you
AHL S/T
24/9/56

84

Mr. M.

Pl. open a file for HRH's visit to Georgia & note reverts of any other subjects as they come up.

25/9.

ACP

List commenced and 83 noted.

25/9/56

Good - now return the F.O. files & Bill. this one on 15/x for reply to 83

26/9.

15/10/56

85

The Falkland Islands Company, Limited.

(INCORPORATED BY ROYAL CHARTER 1851.)

REGISTERED 1902.

AGENTS FOR LLOYDS.

TELEGRAMS "FLEETWING PORTSTANLEY" VIA RADIO.

Stanley,

27th September 1956

The Honourable the Colonial Secretary,
STANLEY.

Sir,

Your ref: 1537 - 21/9/56

We thank you for your letter regarding the spare radio beacon lying at South Georgia, and the possibility of it being erected at Cape Pembroke.

The Managing Director at one time thought it would not be necessary to fit s.s. "DARWIN" with Direction Finding equipment in addition to Radar, but Captain White advises that it has been compulsory since 1952 and we have called Mr. Young's attention to this fact.

We expect to hear by 24th October mail that Direction Finding equipment has been or will be fitted to "DARWIN" and will write you again.

I am, Sir,
Your obedient Servant,

A. G. Barkin

MANAGER.

Ackd Sec. 27/9/56

C.S. 28/9/56

B.U. 30/10/56

R.U. 6/11/56

AIDE MEMOIRE No. 1.

Radio Beacon (spare) for use in Colony. File 1537.

See 71, 77-85.

The question of utilising the spare radio beacon at South Georgia was first raised by Mr. Huckle and agreed by Capt. White of the "Fitzroy" who considered that a radio beacon would be of considerable benefit to vessels making Stanley and its installation should be given serious consideration.

Superintendent, Posts and Telegraphs says the beacon's frequency is in the Medium Band and will not present any difficulty to ships fitted with Direction Finding Equipment.

According to Capt. White it is compulsory to equip ships with Direction Finding Equipment and the Local Manager of the Falkland Islands Company was drawing Mr. Young's attention to this. No confirmation has yet been received from the Falkland Islands Company that the new ship will be fitted with Direction Finding equipment.

See 83

Hon. Colonial Secretary in a letter to Mr. Barton said "I shall be going down to South Georgia in November and propose to consider the question as to whether or not the spare beacon should be erected there after discussing the matter with the Administrative Officer and the whaling managers".

Y.H.

Yes. Shd. we ask F.I. Co. if they have heard yet?

WH 19/11

87

A

Note.

I discussed this matter with Mr Bowler this morning. The F.I.C. are now endeavouring to get a dispensation from the Board of Trade that will permit them not to carry D.F. equipment. If that the case there is little point in erecting the beacon here. Mr Bowler will let us know the outcome.

H.F.A. pro tem. B.L. in these months.

C.J.F.

19/11/56

Bee 20/2/57 WA

B

Mr H.

File Bee. acc. fr.

20/2/57

C

A.C.S.

I made arrangements with the A.C. and the whaling company that the beacon should be erected at the entrance to Leith harbour when it is needed, is wanted and can be maintained.

Idea is that we would make an annual subsidy to the Company (Salmon) to maintain the beacon.

Please on the first now ask A.C. if the there have been any developments and if so what do they want to erect and maintain.

C.J.F.

18.2.57

DECODE.

TELEGRAM.

46.

From COLONIAL SECRETARY.

To ADMINISTRATIVE OFFICER SOUTH GEORGIA.

Despatched. 28th February, *19* 57 *Time:* 0410

Received: *19* *Time:*

No: 41. Reference proposal to erect spare Radio Beacon at entrance Leith Harbour.

+ 2. Any developments? If so what are Salvesens terms for erection and maintenance. +

SECRETARY.

+ - +
GTC
JE/MF

Reply at 89.

12/3/57

DECODE.

TELEGRAM.

From ADMIRALTY MARINE OFFICER.

To COLONIAL SECRETARY.

Despatched: 5th March, *19* 57 *Time:* 1715

Received: 6th March, *19* 57 *Time:* 0950

84 No: 54. Your telegram No: 41.

Radio Beacon on Cape Saunders.

I regret I have not been able to progress very far with this matter. Ejelland had been ill and was evacuated on Magadan and Leith Harbour has no Manager to date and to delay the matter further they wish as usual to seek views of their Head Office before committing themselves in any way.

ADMIRALTY MARINE OFFICER.

OTC: F

Y.H.

D. i - ref. 1m c m 87

2/3

90 ~~A~~

ACS.

1) Mr Mathew to note the present position with regard to this beacon. I am keen to see it erected. He should discuss with me.

2). A.T./FINS to insert provision in the 1957/1958 for erection (say £500) and maintenance (say £500 pa.) – I hope it may be less.

~~A~~ 91

A.I. (A.I.).

As at para. 2 supra & then pass file to A.O. designate as at para. 1.

18/3.

~~A~~ 92

A.C.S.

£1,000 inserted in 1957/58 estimates.

~~A~~ 93 WJ. 20/3/57.

A.O. (designate)

To note A above, A.

20/3. 24/3.

BH. 15/5

~~H.O.S.~~

90

Presumably C.O. discussed matter with you & we now await his response?

15/5.

95

P.S.

If it cannot, give him notice two months and then ask his views. He has been very disobliging if we have had nothing in by then.

15.5.57.

Bu. 15/7

15/5

GOVERNMENT TELEGRAPH SERVICE

FALKLAND ISLANDS

SENT

Number	Office of Origin	Words	Handed in at	Date
				19/7/57.

To

ADMIRALTY, SOUTHGEORGIA. DEP. A/G.

89.

NO 122 YOUR TELEGRAM NO 54 RADIO BEACON ON CAPE SAUNDERS STOP GRATEFUL LEARN OF ANY DEVELOPMENTS.

SECRETARY.

JB/MMG.

Reply at 97

Bll 31/7.

16/7

There is a telegram in this file

1/8.

DECODE.

TELEGRAM.

From Administrative.

To Secretary.

Despatched: 30/7/57. *19* *Time:* 2050.

Received: 31/7/57. *19* *Time:* 1030.

96. No. 172. 350. Your No 122. Radio Beacons. Jason Island Beacon has never worked regularly for the prolonged period for which it was designed. It was repaired in April, ran for week and stopped. Its engine bed is on 20ft deep peat which causes engine to vibrate too much. Marconi part of equipment appears quite satisfactory. There is solid rock in more exposed position 4 yards from present engine hut. Difficulty of landing on Jason makes frequent maintenance impossible. I have been there 4 times.

Senior W/T Operator tells me Beacon mast cannot usefully be placed on mountain top close above Point with engine at Point because high land intervening would cause refraction with consequent error of bearing. You know local geography and have charts. Suggest you may wish to discuss with C in C.S. communications staff during Warriors visit ways and means of remote control of Beacon from Point or Whaling Stations. Suggest also taking opportunity to discuss more modern types of D.F. equipment e.g. Consul at say Falklands South Georgia and Signy Base.

On Butlers return with WhalersI will try once more to get Jason working by removal of engine hut to solid rock site. Funds sufficient in maintenance vote. Discussions concerning positioning of Cap Saunders (2nd) Beacon proceeding with manager Leith. Cap Saunders also difficult of approach. Manager is engineer without much interest in navigation. He says he thinks Beacon

DECODE.

TELEGRAM.

From .....

To .....

Despatched : *19* *Time :*

Received : *19* *Time :*

maintenance too difficult to be worthwhile. On return seasons gunners, factory ship Captains and Protector I will continue discussion siting and value of Cap Saunders Beacon either there or else where in suitable position with easy approach if such exists. By mid December at latest I expect to be able to make firm proposals concerning Cap Saunders Beacon. Norwegian in authority seem oppose inner on principal until proved successfully so I will continue to try and get them working but if I can do no more I will obtain written advice from Managers that further efforts are useless.

Administrative.

P/L & GTC underlined.
MNG.

Bell 7/12
(on MS's return)
11/12

Office.

Hon M.E. Inst down a note on this on a month of his South Georgia visit?

[illegible]
23/10/57

150

Discussed

Bu. 3/1/58

[illegible]
31/10/57.

Radio Beacons.

Some years ago two radio beacons were provided for South Georgia at some very considerable expense. Hitherto only one has been erected (at the entrance to Cumberland Bay) and this has proved generally unsatisfactory particularly because of maintenance difficulties arising from its inaccessibility and the difficulty of landing at the site when there is any sea running.

The second radio beacon has never been erected and when I was in South Georgia last year I asked the A.O. to take up the question of its erection at a more satisfactory spot at the entrance of Leith Harbour from which two of the whaling stations operate. Funds for its erection and maintenance have been included in the estimates.

The latest report from the A.O. (made at the end of July) intimates that -

(i) the Cumberland Bay beacon has not been working satisfactorily;

(ii) he will endeavour to improve things by moving the engine hut to a solid rock site;

(iii) on the return of the gunners, factory ship captains and the "Protector" he will discuss further the site and erection of the second beacon. He hoped to be in a position to make firm proposals by mid December.

The A.O. has also intimated that the Leith Management does not appear to be very enthusiastic about the project although when I was in South Georgia all three managements appeared to be keen on it. It is the sort of problem that the "Protector's" technical staff can advise on.

102

NOTES:

Position Try & improve Beacon

Ask advice of Leith Harbour & navy

H.C.S.

Radio Beacons at South Georgia.

The present position is that the A.O. will endeavour to improve the beacon at Jason and will ask the advice of Leith transports and the Navy regarding the second beacon. The survey at present being undertaken by the Navy may assist in choosing a suitable site to cover the entrance to Leith Harbour.

EPA/PT
30th December, 1957

EPA 10/4

104

Hold. B.A. 3 months L.
See how things are progressing.

10/1/58

Bur. 10/4/58

105.

DECODE.

TELEGRAM.

260. *From* ADMINISTRATIVE OFFICER, SOUTH GEORGIA.

To COLONIAL SECRETARY.

Despatched: 14th January, *19*58 *Time:* 1835.

Received: 15th January, *19*58 *Time:* 0930.

For information. Notice to Mariners. South Georgia Stromness Bay. Survey beacon laid in position 138/1/2 degrees 1.47 miles from Cape Saunders Light or approximately ENE two cables from middle groumd rock.

ADMINISTRATIVE OFFICER.

106.

(Intl^d) A.G.D.T.

S.P.T. 107.

For broadcast as discussed pl.
(Intld) J.B.
15,1.58.

108.

ACS. attended to. copy of tel attached for your records pl
SPT 15.1.58

P/L:FH

GOVERNMENT TELEGRAPH SERVICE

FALKLAND ISLANDS

SENT

1537. Conf.

107

Number	Office of Origin	Words	Handed in at	Date
				15.1.58

To NOTICE TO MARINERS. (VFC and ZHF88 to broadcast please on bands used for ships)

AT SOUTH GEORGIA STROMNESS BAY STOP SURVEY BEACON LAID IN POSITION 138/1/2 DEGREES 1.47 MILES FROM CAPE SAUNDERS LIGHT OR APPROXIMATELY ENE TWO CABLES FROM MIDDLE GROUND ROCK.

ADMINISTRATIVE OFFICER
SOUTH GEORGIA.

Time

A.C.S.

While in South Georgia I discussed the question of the maintenance and siting of the Radio Beacons in South Georgia. It is quite clear that the present beacon at the entrance to Cumberland Bay is badly sited having regard to the machinery used in as much as the diesel engine is very difficult to maintain and it is frequently impossible to land at the site. The Manager at Leith is not particularly co-operative and has taken no steps to fit up the Radio Beacon for the entrance to Leith, Stromness and Husvik Harbours. The A.O. is still going into this.

2. In the meantime, however, the Administrative Officer should be authorised to consult the Crown Agents, while on leave in the United Kingdom, to see whether there is any simpler method of providing the necessary power for these beacons. He informs me that the Marconi equipment is entirely satisfactory but the provision of power and the maintenance of the diesel machines is really the main difficulty particularly as regards landing on the sites which are inaccessible in poor or bad weather.

3. Pl. authorise in writing - copy to Crown Agents.

C.J.J.T.
16.2.58.

A.C.S.
Draft o/c on file
11/2/58

1537

19th February, 58.

Gentlemen,

I am directed to inform you that the diesel engine which powers the Radio Beacon installed at the entrance of Cumberland Bay, South Georgia is proving very difficult to maintain owing mainly to the inaccessibility of the site. Mr. J. W. Matthew, the Administrative Officer at South Georgia will be in England in May and he has been authorised to make enquiries regarding the possibility of a simpler method of providing the necessary power for these Beacons.

2. Mr. Matthew will no doubt be calling on you and I am to ask you to be so good as to provide him any assistance he may require.

I am,

Gentlemen,

Your obedient servant,

(Sgd.) J. Bound.

for COLONIAL SECRETARY.

Crown Agents for Overseas Governments & Administrations,
14, Millbank,
LONDON, S.W.1.

to: The Administrative Officer.

30/6/58

Reply at 113.

113

Communications to be addressed to
THE CROWN AGENTS
FOR OVERSEA GOVERNMENTS AND ADMINISTRATIONS
the following reference and the date
of this letter being quoted.

4, MILLBANK,
LONDON, S.W.1.

EM. 713/4.

TELEGRAMS { INLAND: "CROWN, SOWEST, LONDON."
OVERSEA: "CROWN, LONDON."

TELEPHONE: ABBEY 7730.

31st March, 1958.

Sir,

112 I am directed to refer to your letter No.1537 dated the 19th February, 1958, from which it is noted that Mr. J. W. MATTHEW may be calling at this Office in connection with the power supply to the Radio Beacon at Cumberland Bay.

The Crown Agents will, of course, be very pleased to render him every assistance that they are able to.

I am, Sir,

Your obedient Servant,

Ramasar

THE COLONIAL SECRETARY,
FALKLAND ISLANDS.

GHB

JS

Pa

Bu 30/6/58 (112)
Bu 30/5/58 to KIV 103
Bu 112 on 30/9/58 B 7/K

114

110 - 113.

You may like this put on your Sec visit

O/L ?

14.x.58.

115

Yes pl. [illegible]

17/10/58

116

Office

Rep. the Bill. 15/11

117

NB Added to list

17/10/58

Bill 15/11/58

Bill 30/12

NOTE:

When I was in South Georgia in December, 1958, I enquired from the Administrative Officer what action had been taken with regard to the Radio Beacon now destined for Cape Saunders. He told me that Salvesens were assembling the equipment and were hoping to get it up on Cape Saunders in the fairly near future. He suggested that if it was satisfactory then we might consider moving the Cumberland Bay beacon onto a rock bed. He said that he had come to the conclusion that most of the trouble with the Cumberland beacon was that the bed was vibrating on peat foundations and for that reason they had been experiencing constant trouble.

2. We should keep this file in view as I have a shrewd suspicion that both the A. O. and Salvesen's will need prodding at fairly regular intervals to get this beacon working. Please give it a B.U. date for about 6 months and certainly if and when the new Administrative Officer for South Georgia passes through Stanley in May or June.

A.G.D.T.
6. 1. 59

AGDT/MF

Full [illegible] 1/5/59

No.

It is requested that, in any reference to this memorandum the above number and date should be quoted.

COLONIAL SECRETARY'S OFFICE 17 MAR 1959 FALKLAND ISLANDS

MEMORANDUM

119

17th March 1959

From The Collector of Customs & Harbour Master. Stanley.

The Honourable, The Colonial Secretary. Stanley, Falkland Islands.

SUBJECT :-

Knob Island Light

I have the honour to report that Mr. Charles Maddocks of Fox Bay has stated that it is almost impossible for him to maintain the light on Knob Island. His reasons are on page II. FILE H.4.

Sometime ago, when Mr. Clement was passing through Stanley we discussed the problems of maintaining Knob Island Light and he informed me that in his opinion there were no difficulties, and if at any time I wanted help, to let him know and he would get his Foreman, Mike Murphy, on the job.

In the meantime I have sent a telegram to Mr. Clement (see page 12), but before writing I would like to recommend we ask Mr. Clement if he will allow Murphy to look after this light and offer payment at the rate of £12 per annum for his trouble.

I do not think it correct to ask for favours and the vote for Upkeep of Lights and Beacons can cover Knob Island light without having to go to S.F.C.

L J Gruzin

Collector of Customs & Harbour Master.

Hon.

120

This seems reasonable enough to me but before submitting to H.E.G. what work is involved, i.e. a visit once or twice a month or what?

18/3/59.

A.C.S.

121

Batteries to be changed approx once in three months but inspection visits should be made not less than one in every month to watch for corrosion on Batteries especially in winter months.

Note. Telegram received 18/3/59 from Fox Bay stating Knob Island Light is now operating.

L J G 19. 3. 59.

HEG.

122

Submitted for consideration. In my opinion this is fair ~~reasonable~~

21.3.59

I think probably this is the best arrangement. I hope Murphy will take it on. I wish, however, I were entirely convinced that Maddocks's reasons are completely genuine.

R.G.T.
25.3.59.

File this on our file when Press article is here.

26.3.59.

H.C.S.

Noted.

H.M.
26.3.59.

No.

It is requested that, in any reference to this memorandum the above number and date should be quoted.

MEMORANDUM.

1st April 1959.

From The Collector of Customs & Harbour Master, Stanley.

To The Honourable, The Colonial Secretary. Stanley, Falkland Islands.

SUBJECT :- Navigation Lights - Entrance Stanley Harbour.

I have the honour to report that the new Chance-Londex Winker Beacons purchased for Engineer Point and Navy Point have been erected and trials have taken place since 6th March 1959. I am now satisfied that these lights are working efficiently.

In accordance with Colonial Regulation 160, it now becomes necessary for His Excellency to inform the Hydrographic Department of the Admiralty of the alteration.

Attached are full particulars required.

127

Draft pl. — to S/S I think

6/4/59.

L J Grimson

Harbour Master.

128

A.C.S

Draft O/S
DAN
7/4/59

Y.H. Reverse. 128

Draft to S/S s/c. pl.

5/4/59.

129.

A.C.S.

Thank you - as very slightly amended.

P.S. Think the H.R. is writing. He has done a good job on this lights -

130

Issue S/T as draft to Hon. pl.

9.4.59.

9.4.59.

F. I. ref: 1537.

C. O. ref:

132

SAVING TELEGRAM.

From: The Officer Administering the Government of the Falkland Islands.

To: The Secretary of State for the Colonies.

Date: 9th April, 1959.

No. 70. SAVING. COLONY.

Navigation Lights - Stanley Harbour.

133 & 134 I enclose two copies of particulars relating to the two new Chance-Londex Winker Beacons that have been installed at the entrance to Stanley Harbour. I should be grateful if this information may be forwarded to the Hydrographic Department of the Admiralty.

GOVERNOR'S DEPUTY.

DRM/FH

NOTICE OF NEW LIGHT OR ALTERATION OF LIGHT

Name of Light	Engineer Point
Place	Entrance to Stanley Harbour Falkland Islands
Latitude	51° 41'
Longitude	57° 49' W.
Number of Lights	One Light
Colour of Light	White
Fixed, flashing, fixed and flash, Intermittent, Alternating, Revolving	Flash
Interval of revolution of flash	Normal setting 60 flashes per minute
Miles seen in clear weather from Ship's deck	3 miles
Time Light is shown	Unattended. Sundown.
Colour or any peculiarity	None. Cement base painted White, surmounted by Red Lantern House.
Height in feet of centre of Lantern above H.W.	24 feet
Height of building from base to vane	6 feet
Character	Chance-Londex, Electric Winker Beacon, battery operated
Description of Fog signal	None

L J Grimson

Collector of Customs &
Harbour Master

NOTICE OF NEW LIGHT OR ALTERATION OF LIGHT

Name of Light	Navy Point
Place	Entrance to Stanley Harbour Falkland Islands
Latitude	51° 41'
Longitude	57° 49' W.
Number of Lights	One Light
Colour of Light	Red
Fixed, flashing, fixed and flash, Intermittent, Alternating, Revolving	Flash
Interval of revolution of flash	Normal setting 60 flashes per minute
Miles seen in clear weather from ship's deck	3 miles
Time Light is shown	Unattended. Sundown.
Colour, or any peculiarity	None. Cement base painted white, surmounted by Red Lantern House.
Height in feet of centre of lantern above H.W.	21 feet
Height of building from base to vane	6' 1"
Character	Chance-Londex, electric Winker Beacon, battery operated.
Description of fog signal	None

L J Grusar

Collector of Customs &
Harbour Master

Bu 118
on 4/5/10
8

135

Y.H.

118.

You may wish to discuss with the new A.O.?

9/6/59.

136.

Act. C.S.

Perhaps you would give him the papers to read along with the other files and reports he is to see – with a request to let us know the position in, say, three months time.

137 10.6.59.

A.O. designate

As at 136, pl.

11.6.59.

There is a memo on this file

Returned from Mr Coleman
18th June, 1959

138

No.

It is requested that, in any reference to this memorandum the above number and date should be quoted.

COLONIAL SECRETARY'S OFFICE
18 JUN 1959
FALKLAND ISLANDS

MEMORANDUM.

17th June 19 59

From The Acting Collector of Customs.

Stanley.

To The Honourable,
The Colonial Secretary.

Stanley, Falkland Islands.

SUBJECT :-

Winker Beacon Lights

I have the honour to submit a draft letter for your approval and despatch to the Crown Agents regarding the possibility of increasing the intensity of the White beacon light, at the entrance of Stanley Harbour.

Issue copy
[illegible]

Acting Collector of Customs

[illegible]

1537

139

19th June, 59

Gentlemen,

I am directed to inform you that two Winker Light Beacons type T.U.L.B./L2 supplied by Messrs. Chance-Londex Ltd., 10 Rose and Crown Yard, King Street, St. James, London, S.W.1., are installed on opposite points to the entrance to Stanley Harbour. One is coloured red and the other white. It has been found that the red beacon gives ample light and can be seen at a greater distance than the white beacon. The white beacon has been inspected and no fault can be found. In the circumstances it would be appreciated if you would enquire from the Suppliers whether they can suggest any means of increasing the white beacon's light intensity and thereby its range.

I am,
Gentlemen,
Your obedient servant,

(Sgd.) D. F. Morrison.
ACTING COLONIAL SECRETARY
for

Crown Agents for Oversea Governments and Administrations,
4, Millbank,
LONDON, S.W.1.

ECG/MF

Copy to Supt. Power and Electrical.

Bu 10.9.59

(136)

W/EM3 Falkland Islands 7688

All communications to be addressed to the Crown Agents, the above reference and the date of this letter being quoted.

141

THE CROWN AGENTS
FOR OVERSEA GOVERNMENTS AND ADMINISTRATIONS.
4 MILLBANK,
LONDON, S.W.1.

Letter No. 1537
Date 19. 6. 59.

Indent No. 241/57
Date 13/8/58

139

COLONIAL SECRETARY'S OFFICE
- 9 SEP 1959
FALKLAND ISLANDS

6th August 1959

Department:—Customs & Harbour

Sir,

I am directed to append a report in connection with the indent or other communication referred to hereon.

I am, Sir,

Your obedient servant,

The Colonial Secretary,
Falkland Islands.

ITEM No.	SUBJECT	REMARKS
1	Winker Light Beacons 139	The remarks contained in your above quoted letter regarding the strength of the Light Beacon have been forwarded to the suppliers Messrs. Chance-Lender Ltd. and as soon as their comments are received, they will be forwarded to you together with any recommendations.

142

Attn/CPC

& Co. (P) Ltd.

143

Communications to be addressed to
THE CROWN AGENTS
FOR OVERSEA GOVERNMENTS AND ADMINISTRATIONS
the following reference and the date
of this letter being quoted.

4, MILLBANK,
LONDON, S.W.1.

EM3/Falkland Islands 7688

12th August, 1959.

TELEGRAMS { INLAND: "CROWN SOWEST LONDON."
OVERSEAS: "CROWN, LONDON."

TELEPHONE: ABBEY 7730.

Sir,

139 I am directed to refer to your letter No.1537 dated 19th June and to enclose a copy of Messrs. Chance-Londex letter dated 144 4th August for your information.

It has been assumed that the Winker Light Beacons referred to in your letter are those that were supplied against indent 241/57 dated 13.8.57.

With regard to the remarks contained in the 4th paragraph of Messrs. Chance-Londex Ltd. letter, they have subsequently been informed that the average maximum temperatures experienced in the Falkland Islands are below the temperature of 70°F mentioned. In the light of this information they offered to despatch a helium filled white tube for you to try, in place of the white fluorescent tube now in use. They have stated that should the helium tube be found to give a greater range of visibility, they will accept a spare white fluorescent tube in exchange. If the helium filled tube is not suitable they have requested that it should be returned to them.

Their offer has been accepted on your behalf, and instructions have been given to despatch the white helium filled tube to the Harbour Master, Port Stanley.

It would be appreciated if you would inform this office in due course whether the helium filled tube gives satisfactory results, or whether you wish to investigate the substitution of a different form of beacon to give the range required. Will you also please advise this office of the date of dispatch of a spare white fluorescent lamp to the firm, or the return of the helium filled tube.

I am, Sir,
Your obedient servant,

Reply at 148

The Colonial Secretary,
FALKLAND ISLANDS.

JER/NMJ

Chance Londex Ltd

ELECTRICAL MARINE LIGHTING ENGINEERS

PROPRIETORS

STONE - CHANCE LTD., ENGINEERS
CRAWLEY, SUSSEX · CRAWLEY 25251

LONDEX LIMITED, ELECTRICAL SIGNALLING
ENGINEERS, 207 ANERLEY RD., LONDON, S.E.20

MANUFACTURERS OF BATTERY OPERATED NAVIGATIONAL MARINE LIGHTS & FOG SIGNALS

Directors
F W G. BEAUMONT
A NEY
J RAYMOND
Dr W L STERN F.R.S.A., M.I.E.E.

10 ROSE & CROWN YARD
KING STREET, ST. JAMES'S
LONDON, S.W.1

Telephones
TRAFALGAR 2077/8
Cables
CHANDEX - LONDON
Telegrams
CHANDEX - PICCY - LONDON

OUR REF PDD/FDD/0.1584/Gen. YOUR REF EM3/M3/Falkland Islands 7688

Crown Agents for the Colonies,
4, Millbank,
London, S.W.1.

4th August, 1959.

Dear Sirs,

Winker Beacons - Falkland Islands

We are pleased to acknowledge your letter dated 30th July and note the point which has been made by this Authority in connection with some winker beacons supplied in 1957.

Unfortunately there is little that can be done to improve the strength of the white light as compared with the red. We know that there is appreciable difference between the two light sources although they consume the same power.

Means by which the white tube can be improved has engaged our attention for a number of years but so far none of the latest phosphors contribute materially to an increase in light output. It just so happens that the neon gas gives a particularly good light without a fluorescent coating and none of the other rare gases approach its efficiency.

It is noted that the Authority was supplied with white fluorescent tubes and these are a little temperature sensitive. If it is the case that the white light is poor, particularly when temperatures are low, then it would be better for them to use the helium filled white tube. This is not fluorescent coated and is not temperature sensitive. Unfortunately however at normal temperatures round about 70°F or more its light output is not as good as the fluorescent type.

This we regret is as much help as we can give at this stage but we would like to know some details of the application of the white beacon, the range expected from it and whether there is any background lighting. There is the point of course that where a restricted arc of light up to ~~the~~ 30° or so is required we can use the directional lens or range type of beacon which gives much increased power from the same source. It may be that we can offer more assistance as soon as we know more about the circumstances in which it is used.

Yours faithfully,
for CHANCE-LONDEX LIMITED

P.D. Davies,
General Manager.

145

D.P.C.

141 and
to see 143 and for necessary
action pl

15.7.59

HBS. 146

Draft reply at ~~[illegible]~~
for your approval please.

24-9-59.

147

1537

148

29th September, 59.

Gentlemen,

Winker Beacon.

143

I am directed to refer to your letter EM3/Falkland Islands 7688 dated the 12th August enclosing a copy of a letter from Messrs Chance Londex.

2. The white helium filled tube has been fitted but there is no noticeable difference in the light intensity from the shore side. However no report has yet been received from a Master of a vessel entering the Harbour. It is noted from Messrs Chance Londex's letter that they manufacture a range type of beacon giving a much increased power from the same source, unfortunately however the arc is only 30 whereas the beacon in question would need an arc of 220 . Perhaps you would again put the problem to them, mentioning that there is little background light.

3. It is not intended to return to Messrs Chance Londex a white fluorescent tube in exchange for the helium filled tube and I am to request you to arrange settlement debiting the Colony's General Account.

I am,
Gentlemen,
Your obedient servant,

L. J. Halliday
(Sgd.) ~~D. R.~~ Morrison.

for ACTING COLONIAL SECRETARY.

Reply at 158.

Crown Agents for Overseas Governments and Administrations,
4, Millbank,
LONDON, S.W.1.

DRM/IM

149

HCS

118 He might enquire position?

EHW 3.10.59

150

✓ Q

5.11.59.

GOVERNMENT TELEGRAPH SERVICE

FALKLAND ISLANDS

SENT

151

Number	Office of Origin	Words	Handed in at	Date
	Pay			6. 10. 59.

To

Administrator South Georgia (Deps A/c)

No. 242. Radio Beacon for Cape Saunders stop Grateful learn present position and whether Salvesens were able to do anything towards erection

Secretary

Time DRN/IM

DECODE.

No. 140.

TELEGRAM.

From Administrative Officer, South Georgia.

To Colonial Secretary, Stanley.

Despatched : 7th October, *19* 59 *Time :* 1925

Received : 8th October, *19* 59 *Time :* 1000

No. 246. Cape Saunders Beacon.

Work not yet started. Discussed matter with Manager Akseth Leith. It is Salvesens and Akseth's intention to erect this season when labour available.

Administrative Officer.

P/L:LH

Pol 11 8 1 60

King Edward Point,
South Georgia.

12th August 1959.

Ref 350/207

The Honourable the Colonial Secretary,
Port Stanley.

Dear Sir,

Radio Beacons.

I enclose the following copies:- 1. Our telegram to you (to save turning so far back in files), 2.Letter from South Georgia Co. Leith Harbour, 3. A.O.'s letter to Leith Harbour.

Concerning last paragraph of telegram, I can find no record of proposals made. In fact, there is nothing after the letter of 6th October 1958, in the files.

It is clear from the letter received from Leith Harbour on 16th August 1957 that the Whaling Company has no interest in a radio beacon that is not reliable and the Government cannot reasonably expect a Company here solely for the purpose of catching whales to concern themselves with something which is a Government responsibility.

It would appear that the Jason Island Beacon has not operated regularly since its installation 5th February 1954. This is understandable when one considers the 20ft deep peat bed for the engine and the extreme difficulty in landing maintenance crews on this most unsuitable site.

On the question of beacons generally, unless they are 100% reliable they are only a source of worry to those that are tempted to use them. However, since the installation of the beacon at Jason Island, practically all Transports, Tankers and Catchers have been fitted with Radar.

Transports and Tankers approaching South Georgia can, on request, get a radio signal from ZBH, from which they can get a DF bearing, up to a range of 900/1000 miles. This, I understand from the Senior W/T Operator, has been frequently done in the past. Catchers can also obtain a similar signal on request. On nearer approach to the island, say 30 miles, they should begin to get a Radar response. Pesca has its own DF loop which their Catchers use.

I assume that when Catchers are sent out to guide in Transports and other ships by radio, this would be in the immediate approaches to Leith Harbour or Grytviken, that being so a radio beacon would not be of any assistance in what could be termed, and in fact, are, pilotage waterd.

Much money has been spent on the two beacons at present in South Georgia. At this stage, before further money is wasted, it would be wise to ascertain the views of Masters of vessels operating in these waters and using Leith as a port of call. Marconi should also be contacted and advised of the difficulties over the past five years. I have no doubt that in view of the bad publicity amongst Norwegians which has bound to have taken place, they will possibly be able to offer advice.

contd.

If what is needed is long range bearing, then ZBH could on advice from Marconi, be fitted with more modern equipment.

On the other hand, if the beacon is needed for coastal and pilotage work, then I suggest that either Marconi or Decca be asked for advice, making clear the impossibility of regularly maintaining beacons or other navigational aids on the very exposed South Georgian coast.

The ideal answer would be Decca Lattice coverage for the island. This, I would say, might be expensive, and in any case the Companies would have to be consulted as Decca Navigators would have to be installed in their vessels. If this method were used, position plotting of whales killed and flagged would be an easy and useful aid to the Catchers.

I am, Sir,

Your obedient servant,

Administrative Officer, South Georgia.

COPY OF LETTER RECEIVED FROM THE SOUTH GEORGIA COMPANY

LEITH HARBOUR, DATED 16th August 1957. Their Ref HCJ/DIR.

--- --- --- --- --- ---

The Administrative Officer,
King Edward Cove,
South Georgia.

Dear Sir,

I beg to refer to our converation regarding the placing in South Georgia of a second Radio Beacon, which converstation took place during your recent visit to Leith Harbour.

The original idea of instroducing and erecting beacons was, in my opinion, a very good one and I believe was supported by the three Head Offices of the whaling stations operating in South Georgia. However, experience with the beacon erected at Jason Point has shown that maintenance is very difficult and in some cases perilous to the personnel involved.

A second beacon must of necessity be placed on some promontory at a fair number of miles from the existing one, and in a position where its effect is not cut off from ships at sea by outcrops of mountains or high land. Therefore its erection in sheltered bays is out of the question. Any suitable promontory towards either end of the island will have the same dangerous disadvantages of Jason, i.e. no suitable landing place and exposure to the heavy swell and unfavourable weather conditions, such as fog or storms, which are usual around the coast of South Georgia.

As you will know, to make such a landing at Jason or at any proposed site for the second beacon would require absolutely flat calm, which is very rare here. Moreover, maintenance of a beacon towards either end of South Georgia would require an expedition of a ship and several men, and during the busy season it is not always possible to release a service-boat, catcher or men at the particular time when weather conditions are suitably calm for beacon maintenance, whereas on occasions when ship and men can be spared, weather conditions could be unsuitable again. The difficulties in maintenance have been among the main reasons for the second beacon not having been so far erected keeping in view that a beacon which is not guaranteed to be working all the time can be of little use to ships at sea.

You mentioned that due to these difficulties you were thinking of offering the beacon to the Falklands where they could probably have use for it. This seems to me probably the wisest plan. I will contact our Head Office concerning the contents of this letter. No doubt you will confer with Cia Argentina de Pesca and with Tønsberg Hvalfangeri in order to gain their views.

Yours faithfully,

Hans Chr.Jensen

Manager,
South Georgia Co.Ltd.

COPY OF TELEGRAM TO THE SECRETARY, STANLEY, SENT 30th July 195

NO. 202. Original telegram at 77

171 x 350 x your 122 x Radio Beacons x Jason Island beacon has never worked regularly for the prolonged period for which it was designed x It was repaired in April comma ra n for week and stopped x Its engine bed is on 20 ft deep peat which causes engine to vibrate too much x Marconi part of equipment appears quite satisfactory x There is solid rock in more exposed position 4 yards from present engine hut x Difficulty of landing on Jason makes frequent maintenance impossible x Have been there 4 times x para

Senior W/T Operator tells me beacon mast cannot usefully be placed on mountain top above Point with engine at Point because high land intervening would distort RDF waves when received at sea x You know local geography and have charts x Suggest you may wish to discuss with C in Cs Communications Staff during Warriors visit ways and means of remote control of beacon from Point or Whaling Stations x Suggest also taking opportunity to discuss more modern types of DF equipment eg Consul at say Falklands South Georgia and Signy Base x para

On Butlers return with Whalers I will try once more to get Jason working by removal of engine hut to solid rock site x Funds sufficient in maintenance vote x Discussions concerning positioning of Cap Saunders brackets 2nd brackets beacon proceeding with Manager Leith x Cap Saunders also difficult of approach x Manager is Engineer without much interest in navigation x He says he thinks beacon maintenance too difficult to be worthwhile x On return seasons Gunners comma Factory Ship Captains and Protector I will continue discussion siting and value of Cap Saunders beacon either there or elsewhere in suitable position if easy approach if such exists x By mid December at latest I expect to make firm proposals concerning Cap Saunders Beacon x KXNPG HNFEM BRPGU OGSTH LFLHL HUFWL LDAPS NANRO RNABK NDIOP PHPBP so I will continue to try and get them working but if I can do no more I will obtain written afvice from Managers that further efforts are useless.

COPY OF LETTER FROM ADMINISTRATIVE OFFICER, SOUTH GEORGIA TO THE MANAGER, SOUTH GEORGIA COMPANY,LTD., LEITH HARBOUR DATED 6th OCTOBER 1958. No.206.

Dear Sir,

Radio Beacon.

I am sending herewith all the parts for the beacon which I have here except the masts and some sulphuric acid, which can follow as it is getting late this evening.

Please find also the Marconi Co.'s technical handbook in which I have placed two letters concerning the erection of the beacon.

I cannot find a copy of the plan of the wooden hut that Marconi's recommended making but I see from my letter to you no.50 4/51 of the 20th October 1957, that you had a copy of it then. Can you locate it? The hut parts are not here and will have to be made. All that was sent was the bales of thick slag wool blanket and 1 roll of aluminium foil. Have you sufficient materials for the making of the hut?

According to my record there were stored in the Wireless Shop at Leith Harbour on 27th Aug.1956 the following beacon parts:-

Beacon transmitter unit
Bearing extractor
Contactor 55/58 volts
Code sender type SM3A
Synchronode Beacon Contactor
Rotary Converter Type A52

I hope to be in Leith before long again and we can discuss any queries that may arise out of this.

Yours faithfully,

Adminsistrative Officer
South Georgia.

ADVICE OF AMENDMENT ORDER PLACED.

W / EM3 Falkland Islands 7680/1

1537

All letters to be addressed to the Crown Agents, the above reference being quoted.

THE CROWN AGENTS
FOR OVERSEA GOVERNMENTS AND ADMINISTRATIONS
4, MILLBANK, LONDON, S.W.1.

Telegrams { Inland: Crown, Sowest, London. Overseas: Crown, London
Telephone: ABBey 7730.
Telex No. 24209

Indent No. 241/57
Special A/c (if any)
Dept. Customs & Harbours
The Colonial Secretary,
Falkland Islands.

The Crown Agents transmit below a copy of a letter regarding a contract of which details have already been forwarded under the reference shown.

Your letter No. 1537 dated 29th September refers. Messrs. Chance Londex will endeavour to deal with the second para. of your letter through their Research dept. On further advice will follow.

4th November, 1959.

Gentlemen,

Your reference PDY/FDD/O.1584

148 I am directed to refer to your letter dated the 28th October and confirm acceptance of the additional cost for the following item supplied against the above order for Light Beacons which, it is understood, was despatched to the Harbour Master, Port Stanley, under cover of your letter PDD/FDL/O.1584 dated 19th August:-

One Helium filled white tube for Type U B/L2 Winker Beacon. @ £4-10-0

I am, Gentlemen,
Your obedient servant,

(Sgd.) W. Chapman

Messrs. Chance Londex Ltd.,
10 Rose & Crown Yard,
King Street,
St. James,
London S.W.1.

JS/CC

Extract from the Colonial Secretary's Report
on his visit to South Georgia, December, 1959.

Erection of Radio Beacon.

We are quite unable to make much progress with the erection of the radio beacon although Leith has got as far as assembling all the equipment in order to test it and check that it is all there. The Leith management have in fact been told to get on with it by Salvesen but -

1. It is quite clear and Akseth the Leith Manager said as much quite bluntly, that the whaling companies in South Georgia are not particularly enthusiastic about the project.

2. If it is erected it will probably be a last charge on the maintenance priorities and we may have the beacon up and find ourselves in the position of having to continually prod Leith into doing something about the beacon.

3. Practically every ship and catcher using South Georgia harbours now has radar and the need for the beacon is very much less than it was a few years ago.

It was agreed that the A.C. should once again approach the managements, point out all the implications (expense - maintenance etc.) and get them to confirm - if they will - that they really consider the beacon to be a worth-while project of definite value to the Masters of ships using South Georgia waters. If they still say that they want it then the A.C. will press the Leith management to get on with the job. If they are not particularly enthusiastic then the A.C. will report accordingly and await instructions.

My own feeling is that once the beacon is up and provided it can be kept working, then it will be regarded as a useful asset. But Leith are the only people who can keep it working and if they are quite indifferent about it - possibly for quite good reasons - then we should drop the project - save the money and dispose of the plant.

Bm. 7.3.60
B

DECODE.

TELEGRAM.

No. 135.

From Administrative Officer, South Georgia.

To Priority Colonial Secretary, Stanley.

Despatched : 11th January, *1960.* *Time* :1305

Received : 11th January, *1960.* *Time* :1530

No. 8. Radio Beacon Cape Saunders.

Letters on the lines drafted by Colonial Secretary during recent visit sent all three managers. Pesca and Tonsberg not in favour of erection. Note from Akseth Leith "ref. note re Beacon. We have instructions from our head office to commence work when labour available, we are now in a position to begin foundation work but appreciate your views Akseth". Instructions referred to are in letter from Elliot dated 7th August 1958 saying it had been agreed with Magistrate to erect. In view of his instructions unfair to expect Akseth to make a decision where head office policy involved. Suggest in view of Leith Harbour being now in a position to commence foundations that direct telegraphic contact be made with Salvesen Leith pointing out decision of Pesca and Tonsberg and ascertain Salvesens opinion or decision.

Administrative Officer.

Reply at 172.

P/L:LH

B.U.F.

(Intld.)

JB

164

Y.E.

f.162 & 163

You are aware of the long-laboured-history of the second beacon for erection at Cape Saunders.

When I was in South Georgia on this last occasion it seemed clear to me that nobody in South Georgia really wanted it - and if erected we would have to keep changing keeps - who are the only people who could look after it - to see that it was maintained. And if they had other more urgent work for their technicians then the unwanted baby would have to wait.

My own feeling is also as the A.O. suggests along the lines of the attached draft.

165

13.1.60.

HCS.

We spoke and you made the point that since Salvesen has the big ships he is the one most interested. I have condensed Telegram.

EBA. 14.1.60.

100

16.1.60.

GOVERNMENT TELEGRAPH SERVICE

FALKLAND ISLANDS

SENT

167

W. & S. LTD.

Number	Office of Origin	Words	Handed In at	Date
	Psy etat			16. 1. 60.

To

Salvesen Leith Telex (Deps A/c)

Following from Arrowsmith stop Radio beacon Cape Saunders stop Local South Georgia opinion is that since use radar now almost universal erection and maintenance of beacon unnecessary stop Am anxious help companies but now doubtful whether go ahead stop Would much value your advice

Secretary

Reply at 168.

Bu 3/2/60

Time EPA/IM

DECODE.

No. 13.

TELEGRAM.

From Salvesen, Leith, Scotland.

To Colonial Secretary, Stanley.

Despatched: 19th January, *19* 60. *Time:* 1120.

Received: 20th January, *19* 60. *Time:* 1030.

107 refers

View at Leith Harbour last year was that Saunders beacon would hardly be used by catchers though could be useful to visiting transports especially if unfamiliar with coast. Agree that this scarcely justifies costs of erection and maintenance. Jason beacon worth retaining if could be made reliable.

Salvesen.

109

P/L : IM

B.U.F.
(Intld.)
JB

169.

J.E.

In view of J.168 I think probably we should now tell P.O. that we are proposing to drop the erection of the second beacon - adding that because of his close concern (chasing the big ships) Fulleman was consulted and has agreed.

Then we shall have to think what to do with the equipment. I doubt whether it would have any disposal value and the best thing would be to hang on to it - in storage - until we get the other one going again - but even that is a major problem in as much as it would have to be moved - and I can't see Pierce doing it. We could put the point to Coleman who may have some ideas - but doubt it. I am dry of constructive suggestions I am afraid.

170. D.G.J. 20.1.60.

HCS.

I agree that the erection of the second beacon shd. be dropped: and the best thing is to ask Coleman if he has any ideas about storage.

SRA. 22.1.60.

171.

Office.

Pl. issue telegram at 5.c.

D.G.J. 24.1.60.

GOVERNMENT TELEGRAPH SERVICE

FALKLAND ISLANDS

SENT

W. & S. LTD.

Number	Office of Origin	Words	Handed in at	Date
	Psy etat			25.1.60

To

Adminoff South Georgia (Deps A/c)

163 No. 16. Yourtel No. 8 stop Radio Beacon It has been agreed after consultation with Salvesen and in the light of views expressed locally in South Georgia that we should not repeat not proceed with erection stop Have you any ideas on disposal or storage

Secretary

Time

AGDT/LH

6u 10/2/60

173

DECODE.

No. 356.

TELEGRAM.

From Administrative Officer, South Georgia.

To Colonial Secretary, Stanley.

Despatched: 26th January, *19* 60. *Time:* 1800.

Received: 27th January, *19* 60. *Time:* 1015.

172

No. 26. Your telegram No. 16.

Radio Beacon.

Would beacon be of any use Stanley approach or elsewhere Falklands. Captain Turnbull could advise regards Tristan da Cunha.

174 Administrative Officer.

H.M.
?
(Intld.) JB

175
(Intld.) AGDT

P/L : IM

Reply at 186

176

H.C.S.

From a perusal of this file I offer with respect the following comments.

1. Capt. White raised the question regarding the value of a Radio Beacon when he was Master of the "Fitzroy". Since taking over the "Darwin" fitted with Radar his views may have changed.

2. A.O. South Georgia who is also a "Master Mariner" states at Page 153 that unless these Radio Beacons are 100% reliable they are only a source of worry.

3. I think it advisable if Government intend to purchase this Beacon to seek the views of Capt. Johnson and Capt. Turnbull as well.

4. My own feeling is that with the small amount of shipping using this Port the purchase of a Radio Beacon costing £2,250 plus erection and maintenance costs would not be justified when the present need for economy is so great.

L.J.G.

Harbour Master.
29/1/60.

177

H.C.S.

You may like to discuss with Capt. Johnston to obtain his views through S/F?

1/2/60.

178

H.C.S.

There are a number of very good reasons why we don't really want it here – finance, maintenance and competent staff to run being the main ones.

Triton might be a starter. Pl. let us when Shackleton returns and I will ask Turnbull and the Hydrographer.

1.2.60.

Rec 3/2/60

A.C.S.

I spoke to Commander Grattan, the hydrographer on R.R.S. Shackleton, about this matter and he said that there would certainly be no need for this equipment at Tristan. I have no ideas left and I think all we can do is to arrange to ship the stuff up from South Georgia next season and ask the C.A. whether they can find a home for it. B.K. is trying to consider next season – and pl. drop a note to Colonel Kelling from what we have in mind and asking him if he can get a list of what is there from Keith who are checking over the equipment.

D.G.F.

13.2.60

180

S.G. No. 350

COLONIAL SECRETARY'S OFFICE
16 FEB 1960
FALKLAND ISLANDS

MEMO.

C.S. No.

21st January 1960

From :—

THE ADMINISTRATIVE OFFICER,

SOUTH GEORGIA.

To :—

The Honourable the Colonial Secretary,
Port Stanley.

(W. & S. LTD. 500/6/56).

Cape Saunders Radio Beacon.

181 - 185

Attached please find copies of correspondence to date on the above subject.

King Edward Point,
South Georgia.

23rd December 1959.

The Manager,
Compania Argentina de Pesca,
Grytviken,
South Georgia.

Sir,

Proposed Radio Beacon Cape Saunders.

This project has been awaiting development for some considerable time and during the recent visit of the Colonial Secretary the matter came under discussion. As a result I would like to bring to the notice of the Managers of the three whaling stations the following points:-

1. Unless the beacon is 100% relieable I consider its existence could cause more anxiety than help.
2. The beacon on Jason Point has given poor results, in fact, it has not operated satisfactorily since its erection. This is partly due to the foundation and to a lesser degree to the difficulty of maintenance. This latter is bound to arise wherever a beacon is erected on the rocky coast of South Georgia.
3. Whilst in the light of experience erection difficulties could be overcome and firm foundations laid, maintenance difficulties would still be experienced if the proposed beacon is erected on Cape Saunders.
4. In considering erection there are several points to bear in mind.

   (a) The Government have not the staff, experience or equipment to erect this beacon.

   (b) In view of the fact that the South Georgia Co. have these facilities, they have been requested to erect the beacon, and their Head Office have agreed that this should be done. However, the natural first consideration of the South Georgia Company is that of whaling, and this limits the time they would have available to carry out the erection. If the weather is

good from the point of view of erecting the beacon, then the weather will be good for whaling and the men wont be available. On the other hand, if the whaling is poor due to bad weather, the men would be available but the accessability of Cape Saunders would be such that erection of the beacon would be impossible.

The above difficulties apply equally for the purposes of maintenance. Result; an extremely doubtful erection date, equipment not improved by being kept in store, expensive to erect and maintain.

In view of the foregoing points, I would be glad if the Managers of all three whaling stations would give me their considered opinions as to whether we should go ahead with this project, bearing in mind that when I say 'we', from the working and maintenance point of view, I mean the South Georgia Company.

Whilst giving this your consideration and final opinion, I would ask whether you think there is still the necessity for this beacon in view of the fact that all the catchers and transports are fitted with Radar, long range D.F. bearings can be obtained from ZBH, and I am informed by the Senior W/T Operator, have in fact been given in the past and are obtainable on request. Catchers are, I believe, fitted with track recorders.

I would like to make it quite clear that there is no reluctance on the part of the Government to go ahead with this project as such, should you all agree on its necessity, but it does seem advisable to reappraise the position at this stage before making a final decision.

I am, Sir,

Your Obedient Servant,

Administrative Officer,
South Georgia.

COPY.

Compania Argentina De Pesca,
Grytviken,
South Georgia.
31st December 1959

The Administrative Officer,
King Edward Point,
South Georgia.

Dear Sir,

Radio Beacon Cape Saunders.

181 We have received your letter of the 23rd December 1959.

The various points concerning the Radio Beacon have been carefully studied and we fully agree to what you write about the difficulties of maintenance and a secure operation of such a beacon.

Furthermore, in our opinion the beacon is now a thing of the past because the demand for it is not as great now asit was when it was first planned.

To meet the demands of todays competion the catchers must be fitted with almost every sort of electronic equipment. Our station has also automatic bearing apparatus and a 17 hour watchis kept by our radio operators. Our transporters can, as you point out, also contact ZBH when necessary.

As a conclusion we would say that we no longer consider the erection of the Beacon at Cape Saunders necessary.

However, on this accasion we would like to mention another field in which the Government could facilitate the operations of the companies and their employees. We are thinking of the high telegraphic expenses the companies and their employees have. The means of communication with the rest of the world are as you know very limited. Mail opportunities are scaree and far from regular. For the main part of the year the possibilities of communication are therefore reduced to telegraphic traffic.

Our station and the catchers have lately been /

/lately been/

modernized to a large extent and especially have new and complicated machinery and mechanical equipment been installed. this fact means that we often have to contact the suppliers of the equipment for technical advise and for ordering spares as we cannot expect our staff to be spialists in every field. To try to cut down telegraphic expenses in this special case is usually bad policy as a large amount of technical details and specifications have to be quoted accurately. The installation of all this modern equipment has of course been necessary to enable us to take part in the keen competition in the industry today.

With regard to our employees the same can be said. The demand of a good communication system is higher in our modern world than it was before, even for a man who has been unlucky enough to choose whaling as his trade. And the expenses for our employees regards telegrams represent a large proportion of their total expenses for a season. This is even more so for our South American employees and the company traffic to South America.

The company's account with ZBH is also extremely high, but ought actually to be higher if an efficient exchange of telegrams could be afforded.

If the Government would consider this question and finally allow a slight reduction of the present telegram rates this would be very much appreciated both by the company and its employees.

Yours faithfully,

Compania Argentina De Pesca.

F. Ringdal.

Manager

COPY

Akiæselskapet
Tonsbergs Hvalfangeri,

NEO/WOL

Husvik Harbour, 6th January 1960
South Georgia.

The Administrative Officer,
King Edward Point,
South Georgia.

Dear Sir,

Your reference 350-2312-59.

We thank you for your interest in proposed Radio Beacon at Cape Saunders.

As you state in your letter erection and maintenance will be costly and an additional obligation to government and companies. Considering the present whaling position we cannot recommend to proceed with matter.

Yours faithfully,

For A/S Tonsbergs Hvalfangeri
Nils R. Olsen
Manager

1537

186

17th February, 60.

To: Administrative Officer,

From: Colonial Secretary,

SOUTH GEORGIA.

Radio Beacon - Cape Saunders.

173

I am directed to refer to your telegram No. 26 of 26th January, 1960, and previous correspondence on the disposal of the above beacon and to inform you that it has been decided to ship it to Stanley next season and ask the Crown Agents if they can dispose of it to some other territory.

2. In the meantime it would be appreciated if you could forward an inventory of the equipment together with a short report on its state of preservation.

(Sgd) J. Bound.

for COLONIAL SECRETARY.

JB/FH

Reply at 188 See 187 Ref 186 (no mail) Bu. 30/6

GOVERNMENT TELEGRAPH SERVICE

FALKLAND ISLANDS AND DEPENDENCIES.

18 /

& S. [illegible] Pd/7/59).

SENT

Number	Office of Origin	Words	Handed in at	Date
				4.7.60.

To

Administr South Georgia. (H.o. A/c)

18 No. 121. My memorandum Ref 1557 para 2 stop Grateful your comments and report by next mail

Secretary

Time DRM/IM.

Ans 199 Reply at 188

BU 24.10.60

188

DECODE.

TELEGRAM.

From Administrative Officer, South Georgia.

To Colonial Secretary, Stanley.

Despatched : 5th July, *19* 60. *Time :* 1720.

Received : 6th July, *19* 60. *Time :* 1000.

187

186 No. 136. Radio beacon your telegram No. 131 and memorandum 1537 refer.

Will be visiting Leith shortly when I hope to check equipment and report on condition of same.

Administrative Officer.

File
DRM

P/L : IM

189

H.C.

188 H.E.'s decision desired?

190

yes sir
24/10/60

24.10.60

Office

191

Accordingly

24.10.60

191A.

188 on H.E.'s washing list in 0276/II.

H 21/10/60.

Original filed in 0313/rl

FALKLAND ISLANDS

MENGEARY POINT LIGHTHOUSE

Report following survey on 6th May, 1959

1. LOCATION

The lighthouse is situated at Mengeary Point, East Falklands, and serves as a harbour light for shipping entering and leaving Stanley Harbour, and also a local navigation light for small coasters visiting camps around the islands. It is the Northern harbour entrance light - Cape Pembroke serving as the Southern light.

2. GENERAL DESCRIPTION

The lighthouse, depicted on Plates 11 and 12, comprises a steel lattice tower 44 ft. high from ground level to underside of lantern, surmounted by a lantern in which is housed an acetylene open flame burner, which exhibts a character of two white flashes every seven seconds. Operation of this flasher is by sun-valve located on the lantern roof.

Acetylene gas is stored in six accumulators (A.50) housed in a steel cabinet situated at the base of the tower, and the gas is piped therefrom to the lantern. Immediately adjacent to the tower is a small timber shed for the Attendant's use, and which also houses one reserve gas accumulator.

3. TOWER

The tower is of mild steel lattice construction with four corner legs bolted down to concrete foundation blocks by two 2" diameter holding down bolts per leg. The structural members are generally of angle section, the legs being double angles battened, and connections are riveted, or bolted. The whole of the steelwork is in an advanced stage of corrosion and many of the structural members are so reduced in effective cross sectional area that over stressing to serious proportions must obtain when strong wind forces are in action. The access ladder is also of mild steel and is attached to the tower at each level of cross bracings. The degree of corrosion, apart from other considerations, means that access is dangerous. No guard hoops are provided to the ladder and no intermediate platform is fitted. The lantern gallery steelwork and floor plating is in a very bad and dangerous condition. There is evidence of lack of adequate maintenance or protection by regular painting.

4. LANTERN

The lantern murette, glazing astragals and roof are of mild steel but apart from local areas of corrosion these are in fair condition, although rust removal, priming and painting is required urgently, to arrest further corrosion. Certain of the glazing capping strips are loose, the bolts having loosened and, in some instances, fallen out. The lantern glazing comprises 15 panes, twelve of which are cracked, and in two of these there are holes. The glazing is generally in a deplorable condition, although spares are housed inside the lantern, comprising one large and three small panes, all of which are serviceable. The sun-valve, which is fixed to the lantern roof by a steel bracket, appears to function but the bracket and gas piping are in bad condition.

5. OPTIC AND FLASHER

The optic is a 500 m.m. diameter drum lens, and the glass and gunmetal framing are dirty but in good condition. The flasher is an A.G.A. reference KK130/81095 T130/9964, and it would appear

that it was last serviced in 1936. A 25 litre is fitted and the flasher unit as a whole is dirty but evidently in a serviceable condition.

6. ACETYLENE CYLINDER CUPBOARD

This cupboard is of mild steel and is fixed to the tower steelwork at the base. Houses indide are 6 No. A50 gas accumulators, which are all coupled to one common supply line. The cabinet is severely corroded and the pipework and unions are also corroded and in a bad condition.

7. RECOMMENDATIONS

The general condition of the steel tower, access ladder, lantern gallery and railings is such that any attempt to repair or renew sections of the steelwork would be extremely difficult and definitely uneconomical. The structure is considered to be dangerous and unsafe, and complete replacement is considered to be the only satisfactory solution. The lantern, however, together with the optic and flasher, can reasonably be salvaged and incorporated in any new proposals, which might take the form of a tubular steel tower, or perhaps precast concrete. New storage arrangements would also be necessary for the acetylene accumulators and this could take the form of a cabinet constructed in steel or timber. If mild steel is entertained for the new construction, all such material should be galvanised. Although the flasher is serviceable it is recommended that a replacement unit be provided immediately by the A.G.A. and the present one returned to them for full overhaul.

Finally, it is suggested that perhaps when the new tower is erected, maintenance should be carried out at more frequent intervals in order that deterioration of the materials will not reach the stage of the present tower.

Copy sent to Harbour Master.

Fol. 188 refers. discussion list and then 192 to them for comments

1944

Harbour Master,

fs. 192-3 for your comments, pl.

RB
for C.S.
27. 10. 60.

H.C.S.

1. History. As far as I can trace, Mengeary Light was erected and put into service in July 1922, but I have failed to find any files dealing with its purchase or erection. I gather from one of Stanley's old inhabitants who was actually working on the building of this Light that it came from United Kingdom long before the 1914 War and was originally intended for Seal Lion Island.

After taking over the Harbour Department in July 1956 I made a point of visiting this Light and reported verbally to your predecessor about its condition. Much later Mr. Denton-Thompson also inspected the Light with two Naval Officers and agreed that it would be unwise and uneconomical to attempt to repair it. The matter was also discussed with S.F.C. and Mr. Denton-Thompson explained the condition of this Light to them and stated he intended to get the two Trinity House Engineers to carry out an inspection and make recommendations.

These two Engineers carried out their inspection on the 6th May 1959 and I was detailed to go with them. Both the Engineers and myself left for United Kingdom the next day, but it was agreed that they would forward their report to the Colonial Secretary in due course. As no report had been received I wrote to the Senior Engineer Mr.J.Lewis on the 26th May and received a reply from him dated the 9th June 1960 informing me that the report had been incorporated with his main report on Cape Pembroke Lighthouse.

2. Replacement. I am of the opinion after discussing the question with the Master of M.V. "Philomel" that such a high tower of some 44' is not necessary, and a light of the same type built on a 12' mounting would be more economical and much cheaper to maintain. Perhaps this point could be discussed with the Masters of "John Biscoe", "Shackleton", and "Darwin", before deciding on a replacement. We could then make provision for a new Light when preparing the 1961/62 Estimates and as the Master of "Philomel" is going on leave he could select a light suitable and also take a short instructional course on it.

Harbour Master.
2/11/60.

196

H. M.

Will try to arrange a conference with Captain Wright & Captain Turnbull to discuss how we can certify the [illegible] of the "Philomel" presumably it must be in hands of Treasury

R 4/4/60

197

H.M.

As above please.

4/11/60

198

H.G.S.

Noted.

HG

4.11.60.

BU 11/11/60.

149

DECODE.

TELEGRAM.

From Administrative Officer, South Georgia.

To Colonial Secretary, Stanley.

Despatched: 9th November, *19* 60. *Time:* 1730.

Received: 10th November, *19* 60. *Time:* 1015.

No. 220. Radio beacon.

186

187 Your telegram No. 121 and Memorandum ref. 1537 refers.

All equipment now at Point awaiting shipment. Do you wish equipment shipped by Shackleton on her next visit here? Condition of equipment is such that overhaul by makers desirable before shipment to other territory.

Administrative Officer.

(Intld.)
DM 10/11/60

P/L : IM

Reply at 20th.

200

H.M.

Decided at the conference between Captain Turnbull, Captain White, H.M. & myself that 12' high would be sufficient.

Presumably both will write to take up this question. PC will put return file so that action can proceed on the radio beacon

281 18/11

H.G.S

Noted. Action will be taken accordingly and provision made for this work when completing the 1961/62 Estimates.

HGS
18.11.60

Y.E. An order is needed on 199.

At 170 is Y.E.'s order not to erect at Cape Saunders.
At 179 is the decision to bring it here with a view to asking the C.A.A to find a home for it. Since then we have been awaiting the report on its state of preservation asked for by 186. The implied answer in 199 seems to be that it is not very good. H.M. reckons that it would be about 5' + 4' + 4' so I suppose there would not be much trouble in shifting it here or keeping it till we get a decision but I wonder whether it would not be best (a) to send an accurate description as possible to the C.A.A. & (b) if they want it to ship it direct from South Georgia without getting it here.

In any case perhaps we might now ask ~~him~~ A.O to keep it till Y.E.'s visit and put the th on the list.

17/11/60

203

17.11.60.

BW 1.12.60

GOVERNMENT TELEGRAPH SERVICE

FALKLAND ISLANDS

SENT

Number	Office of Origin	Words	Handed in at	Date
				30.11.60.

To

Adminoff South Georgia (Deps A/c)

199 No. 207. Yourtel 220 Radio Beacon stop H.E. will discuss during his visit meanwhile please retain equipment at Point

Secretary

Time HLB/IM.

Fair then B.U. for H.E.'s visit S.G.

1. 12. 60. (Intld.) HLB

King Edward Point,

South Georgia.

22nd October 1960.

Sir,

206 Attached is listed all cases and equipment belonging to the Radio Beacon which has been received from Leith Harbour and now at the Point awaiting shipment to Stanley. As will be seen from this list a number of cases have not been opened and so contents may be checked by reference to case number and original Advice Notes and Shipping Specifications. Parts which were received from Leith unpacked have been repacked and contents listed.

From the general conditions of parts, and bearing in mind the fact that they have been lying around at Leith for approximately eight years, I consider it would be advisable to have all this equipment overhauled by the makers or a competent electronic engineer before it is offered to or sent to any other territory.

b.c. I have also enclosed all relevant papers on the Radio Beacon.

I am, Sir,

Your obedient servant,

Administrative Officer,
South Georgia.

The Hon.The Colonial
Secretary,
Port Stanley,
Falkland Islands.

RADIO BEACON EQUIPMENT

South Georgia.
22nd October 1960

Case Number
- 17493
- 17495
- 17579
- 17598
- 17580
- 17596
- 1759? (Marked Fragile)
- 17590
- 96473
- 8801-(1) 1223/1227
- 8801-(4) 1228/1232
- 8801-(3) 1228/1232
- 27452 (06546)

Above cases received from Leith in unopened condition.

- 6. Mast Sections
- 7. Bags lagging
- 1. Diesel Generator set Complete.
- 1. Air Trunk
- 1. Large fuel tank
- 1. Small fuel tank
- 1. Small package asbestos sheets
- 1. Bundle wood laths.
- 11. Battries unpacked.

Above received in unpacked condition from Leith.

	In cases marked letter
Ground Anchor Rigging screws Coil 1/2" wire Switchboard frame	C
1. Bag mast fittings	A
1. Radio Beacon Transmitter Type RB.109	
1. Automatic Code sender No.41663	B
1. Ratary Convertor Type A.52 No.446341	
1. Synchronode Beacon Contactor.	
1. Contactor unit for 55/88 volt supply.	
1. G:E:C: Propellor fan and motor.	

Above received in unpacked and used condition from Leith, repacked at Point case letter shown opposite each item.

207

Hon CS.

The Beacon has now been landed on our doorstep. Do you still wish to follow up the suggestion at 179 pe?

B.1.61

208

G.S.

? A. at 179 ✓

or 14/1/61

16.1.61.

S/Fids

209

I wonder if you could let me have the original indent for these Beacons? I believe they were purchased in 1951/52.

18.1.61

210

A.C.S.

I regret to say that Supplies section can find no trace of indent referred to above.

pp SECFINS

25/1/61

211

S/C Perhaps we have the indent here?

25/1/61

212

ACS

The Secretariat file since formed restricted all indents for those years.

25.1.61

Report to Sec

BU 15.5.61

EXTRACT FROM RECORD OF DISCUSSION HELD AT GOVERNMENT HOUSE ON TUESDAY 11TH APRIL, 1961, BETWEEN HIS EXCELLENCY THE GOVERNOR, THE HONOURABLE THE COLONIAL SECRETARY AND CAPTAIN COLEMAN, ADMINISTRATIVE OFFICER, SOUTH GEORGIA

(Original in D/22/59)

Radio Beacons

The radio frequency reserved to the Jason Beacon could now be withdrawn. The other Beacon which is at present lying on the F.I.C. East Jetty should now be removed to the Naval W/T Station and inspected. It is believed that although the equipment has been neglected for several years some items may be usefully employed locally. S.P.T to inspect and report.

HLB/TM.

214

SPT

Beacon is at the Naval W/T Stn. Would you inspect and report pl. There is a generator which might be of particular interest to you. SPT would like the mast.

2.5.61

215

Sir

From the description contained in accompanying leaflet the generator, etc. is a 5 HP diesel, producing 2.5 KW @ 60-82 Volts direct current; its purpose was to charge a bank of lead acid batteries which in turn supplied power to a rotary converter producing 230 volts at 50 cycles to supply a radio transmitter whose input was 500 watts. I am afraid none of this equipment is of any use, other than for the purpose for which it was originally supplied.

3-5-61.

216

SPG to speak on his next day. Thursday

6/5/61.

BLC 11.5.61

217

SPG will look at it & report further.

SR 11/6/61.

bu 18.5.61

RM. 24.5.61

Radio Beacon South Georgia. 218

Refer C.A.A. to Indent saying it was never unpacked or used and ~~has been kept~~ although it has not been unpacked for ~~a~~ it can be presumed to be in good condition.

Ask if they would be able to dispose of it if we send it back in a F.I.D.S ship.

Mr

5 18/5/61.

1537.

219

19th May, 61.

Gentlemen,

I am directed to inform you that some years ago this Government purchased two Marconi radio beacons for installation at South Georgia under Requisition No. E.I/FIDS 537. Because of reasons of shortage of technicians and difficulty of installing in an isolated position on coast of South Georgia only one beacon was installed. The other beacon has never been used or even unpacked and although it has not been unpacked for inspection it can be presumed to be in good condition. Would it be possible for you to dispose of the beacon if we send it to the United Kingdom on a F.I.D.S. ship?

I am,
Gentlemen,
Your obedient servant,

(Sgd.) D.R. Morrison
for COLONIAL SECRETARY

Crown Agents for Oversea Governments and Administrations,
4, Millbank,
LONDON, S.W.1.

DRM/IM.

Ans 228 ✓
Vol II

Rec 7 8. 61 (mail)

Replied at 220 Ans 221

THE FOLLOWING REFERENCE AND THE DATE OF THIS LETTER SHOULD BE QUOTED IN COMMUNICATIONS.

W10/Sales 2101

TELEGRAMS { INLAND: "CROWN, SOWEST, LONDON" / OVERSEA: "CROWN, LONDON"

TELEPHONE: ABBEY 7730

TELEX NO. 24209

~~210~~ 220

CROWN AGENTS

FOR OVERSEA GOVERNMENTS AND ADMINISTRATIONS

4, MILLBANK,
LONDON, S.W.1.

21st June, 1961.

Sir,

219 I am directed to refer to your letter 1537 of the 19th May concerning the supply of Marconi Radio Beacon you have for disposal and to say that the possibility of finding a market for this equipment is being explored.

The Crown Agents will write to you again on this subject as soon as possible. In the meantime, it is suggested that no arrangements be made for shipment to the United Kingdom.

I am, Sir,
Your obedient servant,

E. Taylor

BU 69 d (mail)

The Colonial Secretary,
Stanley,
Falkland Islands.

EAG/CAHC

221

THE FOLLOWING REFERENCE AND THE DATE OF THIS LETTER SHOULD BE QUOTED IN COMMUNICATIONS

CROWN AGENTS

FOR OVERSEA GOVERNMENTS AND ADMINISTRATIONS

W10/Sales 2101

TELEGRAMS { INLAND: "CROWN, SOWEST, LONDON" / OVERSEAS: "CROWN, LONDON"
TELEPHONE: ABBEY 7730
TELEX NO. 24209

4, MILLBANK,
LONDON, S.W.1.

14th July, 1961.

Sir,

219 I am directed to refer again to your letter 1537 of the 19th May concerning the Marconi Radio Beacon you have for disposal and to say that unfortunately the Crown Agents' records of the original purchase have now been destroyed.

In the circumstances, it will be appreciated if you can give some indication of the date of purchase, the type of transmitter, the present condition of the equipment and any further information you may have available. If, for instance, you still have a copy of the supplier's original invoice setting out details of the equipment and its cost, it would be very helpful if you could forward a copy to this Office.

Efforts will then be made to find a market for the equipment but preliminary enquiries indicate that the chances of finding a ~~dealer~~ PURCHASER are not very great.

I am, Sir,
Your obedient servant,

222

YH
221 If we could keep the Beacon in good order it would help a prospective buyer as I cannot see anyone being interested in something they don't know the condition of. Send the draft with all the papers which are attached and not the ones at b.c. of this file? D.M. 17/8

The Colonial Secretary,
Stanley,
Falkland Islands.

EAG/CAHC

1537.

2 23

17th August, 61.

Gentlemen,

221 I have to refer to your letter W10/Sales 2101 of the 14th July, 1961, regarding the Marconi radio beacon we have for disposal, and to enclose copies of all documents available to us relating to the beacon, which give details of the equipment and its cost, as requested in your letter.

2. Although the beacon has never been unpacked and, therefore, has never been inspected, it can be presumed to be in good condition.

I am,
Gentlemen,
Your obedient servant,

(Sgd.) D.R. Morrison

for **COLONIAL SECRETARY**

Crown Agents for Oversea Governments and Administrations,
4, Millbank,
LONDON, S.W.1.

RB/IM.

Ref. 229 ... Vol. 5

21. 11 61
(mail)

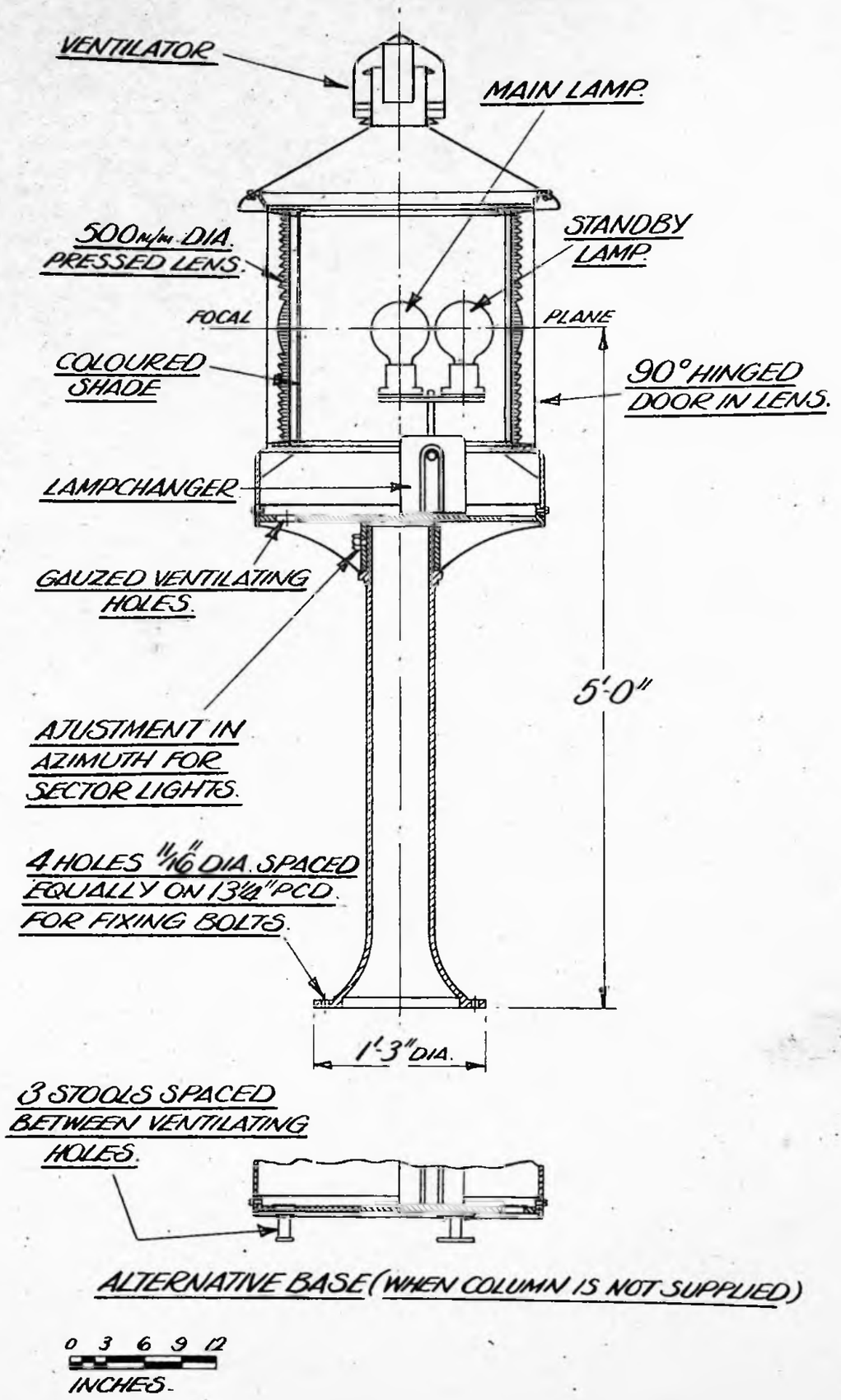

CHANCE - LONDEX LTD.

AMENDMENTS

500 m/m. BEACON with PRESSED LENS & 2 Lamp Lampchanger.
– GENERAL ARRANGEMENT –

DRAWING NUMBER

CL.165.

REF.	DATE	DRAWN BY	ORDER
	30. 10. 50.		

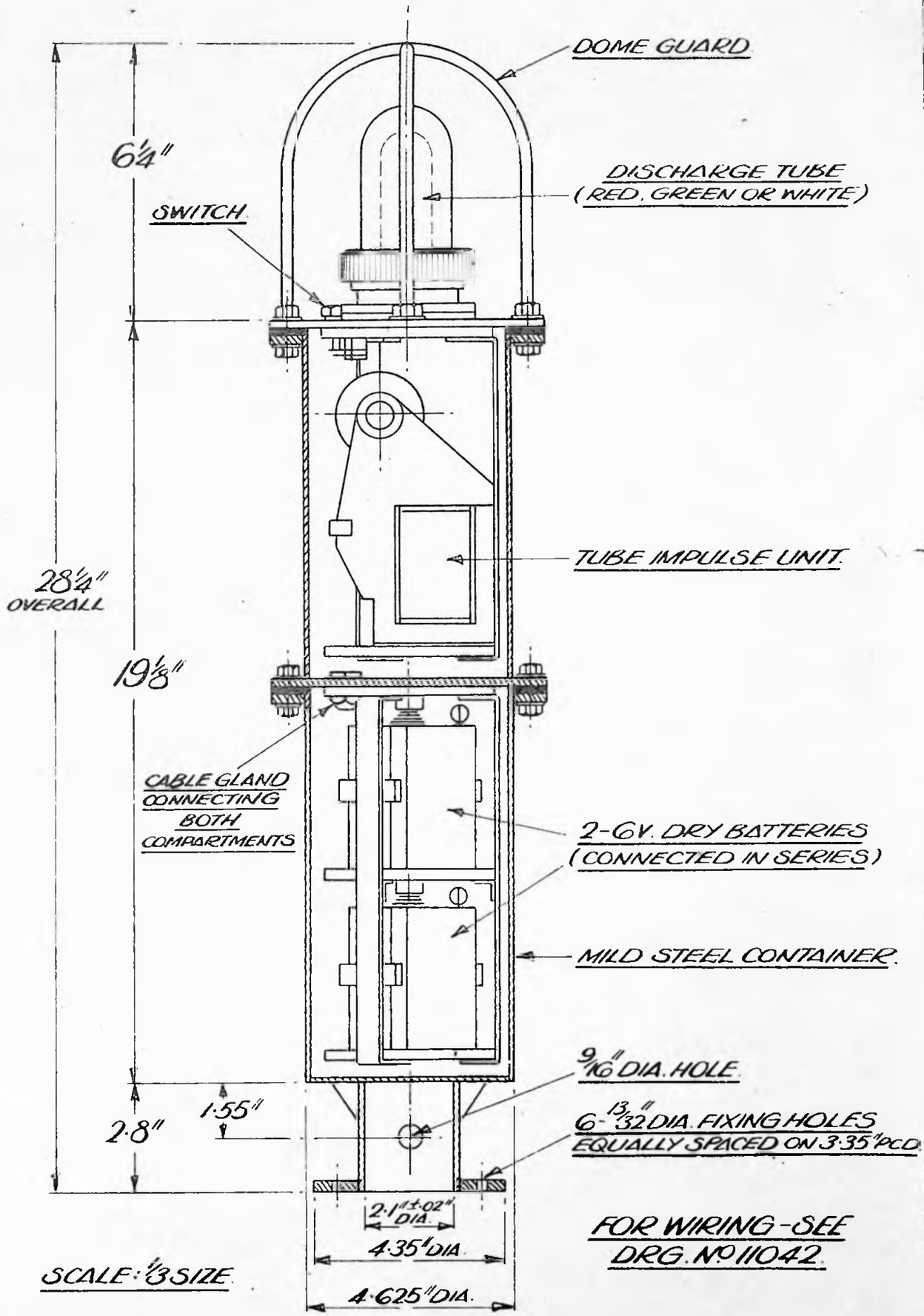

CHANCE - LONDEX LTD.

AMENDMENTS

WINKER BEACON - TYPE UDB/S.
- GENERAL APPEARANCE -

DRAWING NUMBER

CL.179.

REF.	DATE	DRAWN BY	ORDER
	22.11.51		

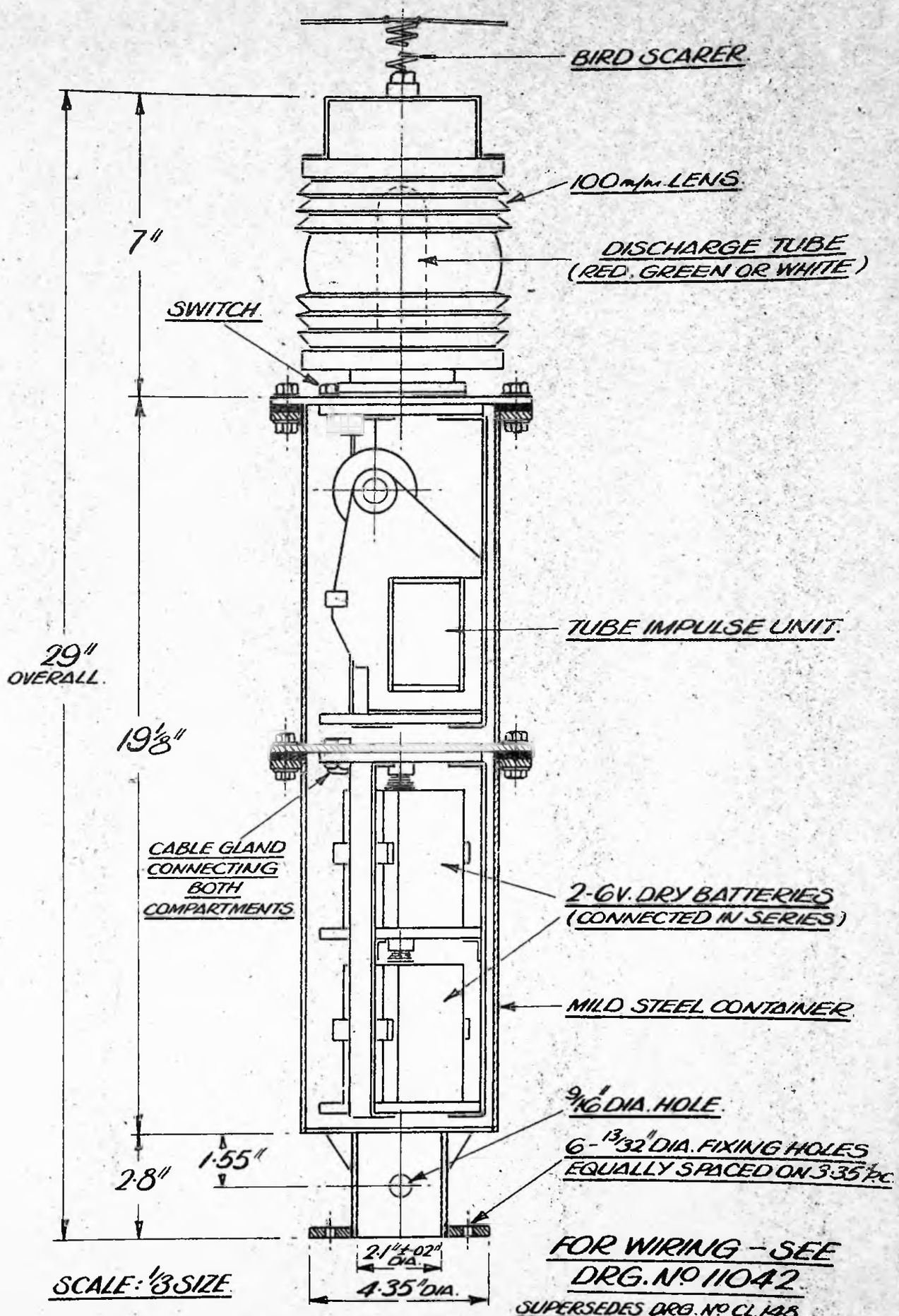

CHANCE - LONDEX LTD.

AMENDMENTS

WINKER BEACON - TYPE ULB/S.
- GENERAL APPEARANCE -

DRAWING NUMBER

CL.180.

REF.	DATE REDRAWN. 22·11·51	DRAWN BY	ORDER

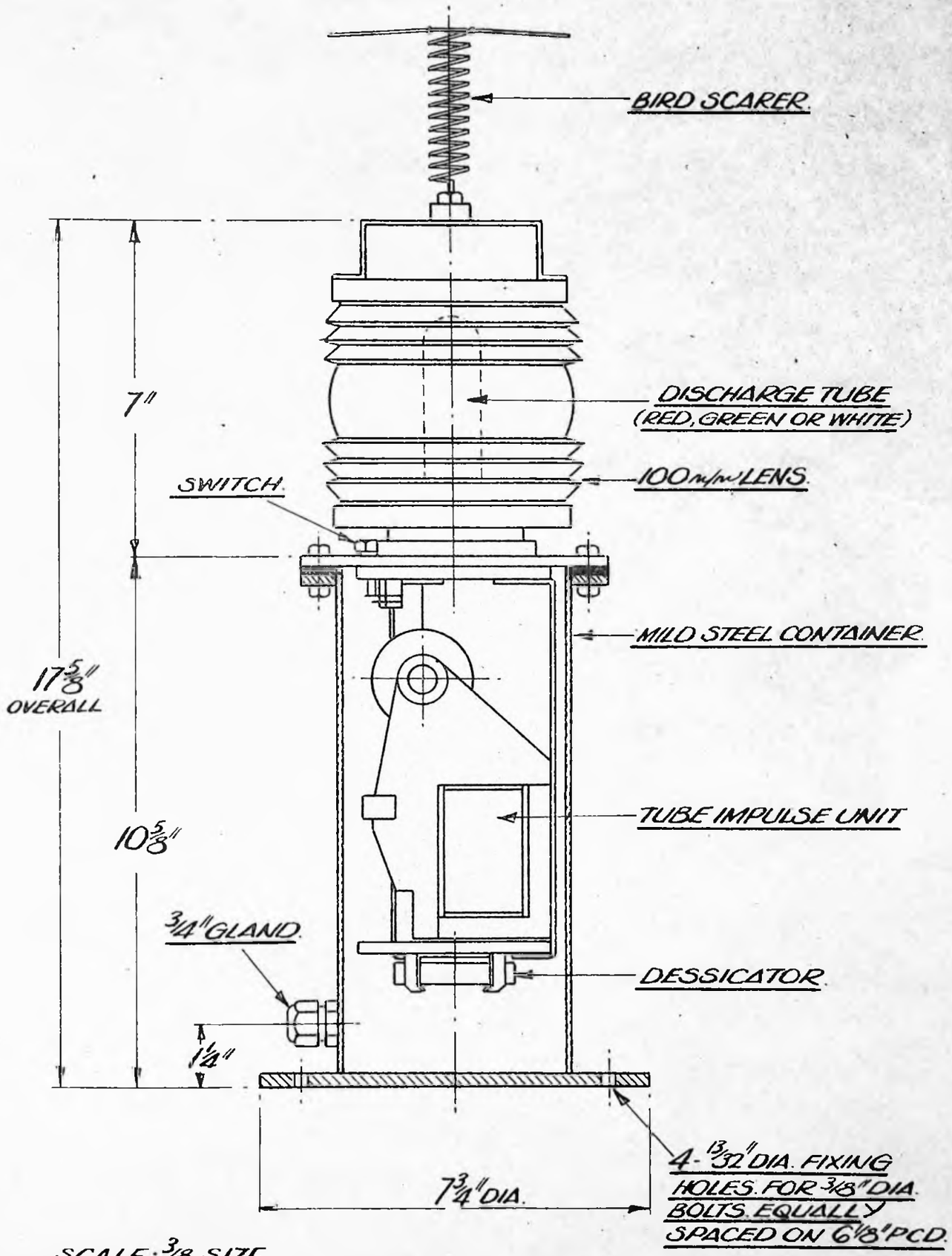

SCALE: 3/8 SIZE.

SUPERSEDES DRG. No 159A.

CHANCE - LONDEX LTD.

AMENDMENTS

WINKER BEACON - TYPE UL.
- GENERAL APPEARANCE -

DRAWING NUMBER

CL.181.

REF.	DATE	DRAWN BY	ORDER
	24. 11. 51		

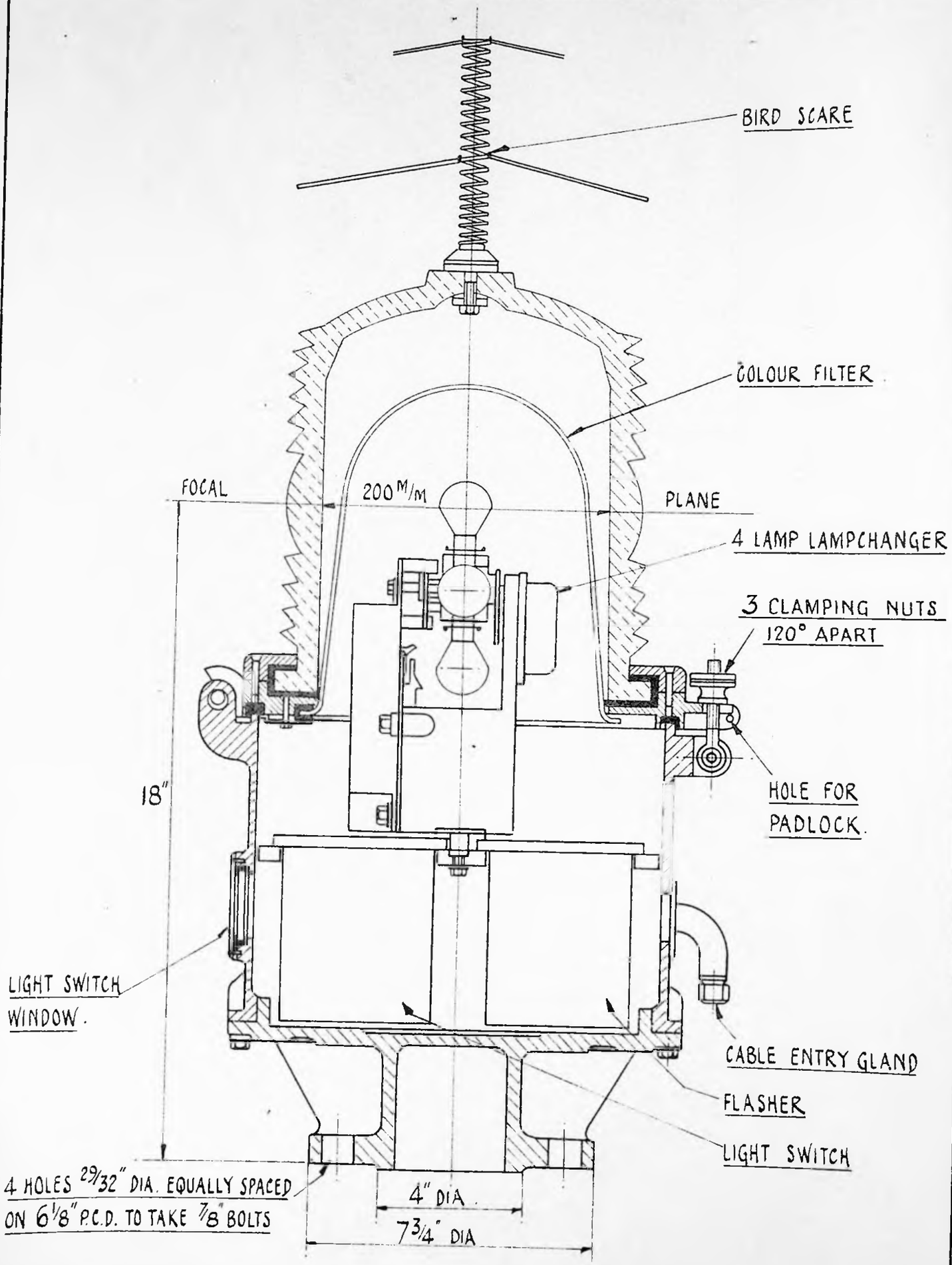

CHANCE - LONDEX LTD.

AMENDMENTS

200 M/M ZENITHAL LENS BUOY LIGHT. GENERAL ARRANGEMENT.

DRAWING NUMBER

CL 184

REF:	DATE 2. 3. 52	DRAWN BY	ORDER.

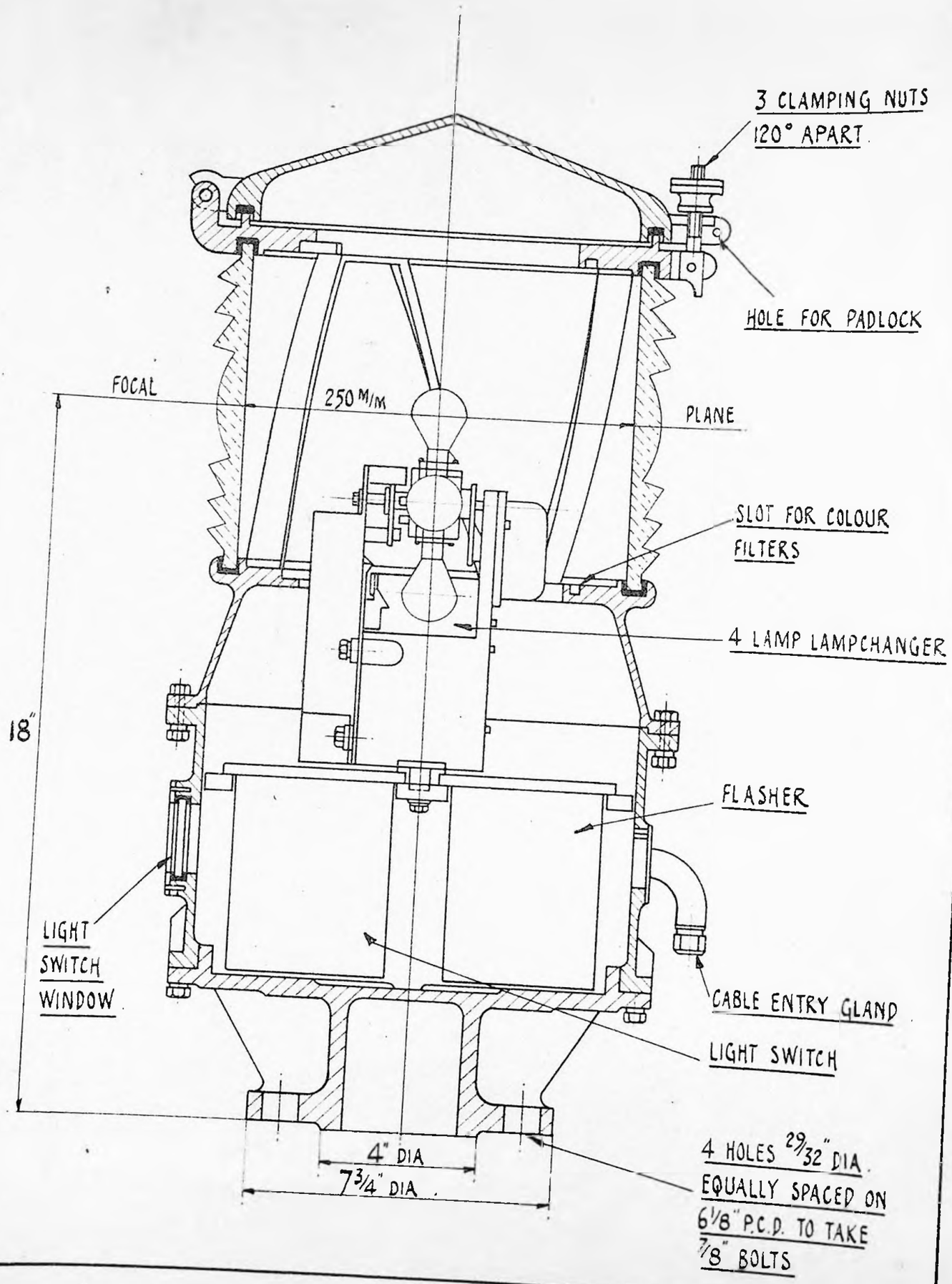

CHANCE - LONDEX LTD.

250 M/M LENS PORTLIGHT. GENERAL ARRANGEMENT.

REF:	DATE. 2.3.52	DRAWN BY	ORDER.

AMENDMENTS

DRAWING Nº

CL 185

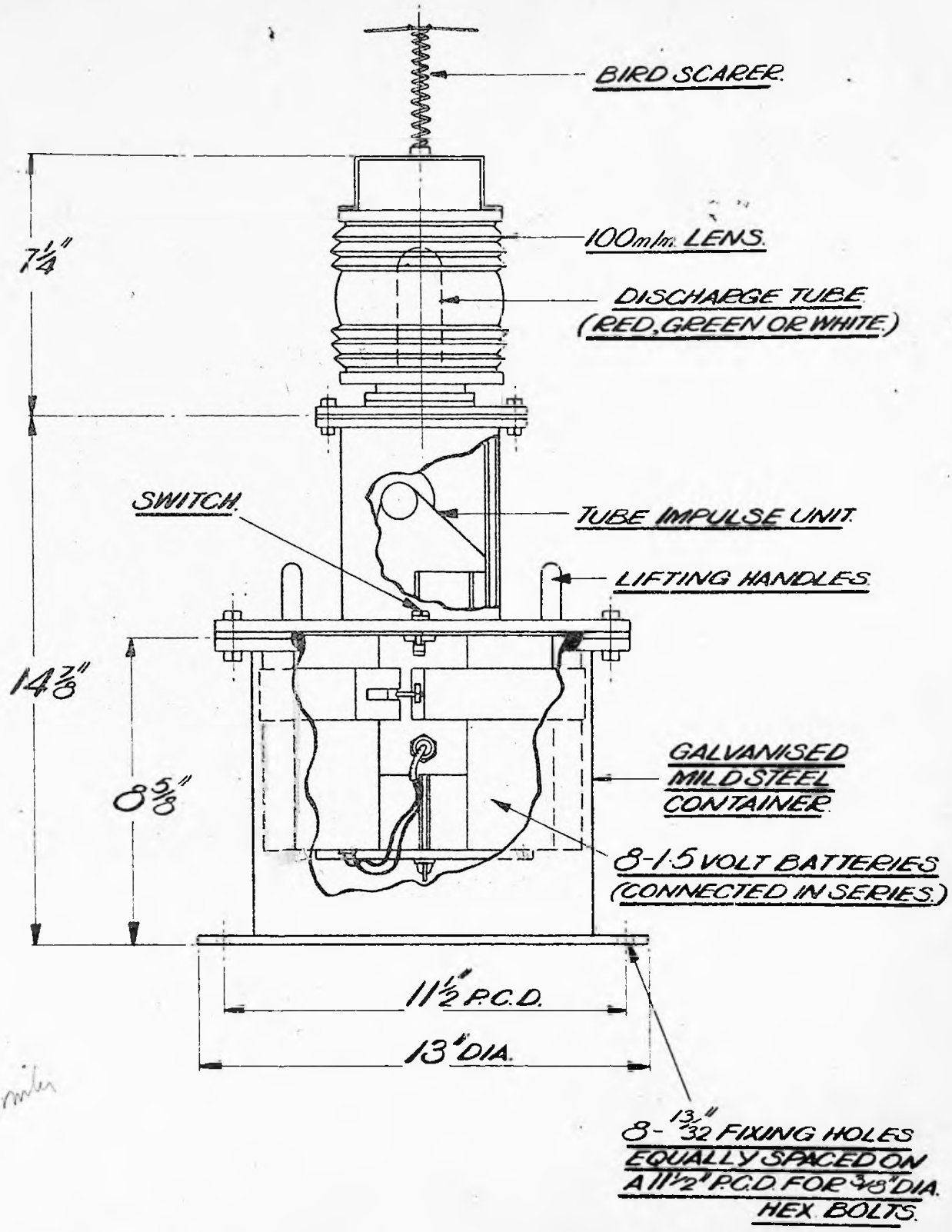

3 winker

SCALE:- ½ SIZE.

CHANCE - LONDEX LTD.

AMENDMENTS

WINKER BEACON - TYPE ULB/L2.

GENERAL APPEARANCE

DRAWING NUMBER

CL. 186.

REF.	DATE	DRAWN BY	ORDER
	1. 5. 52.		

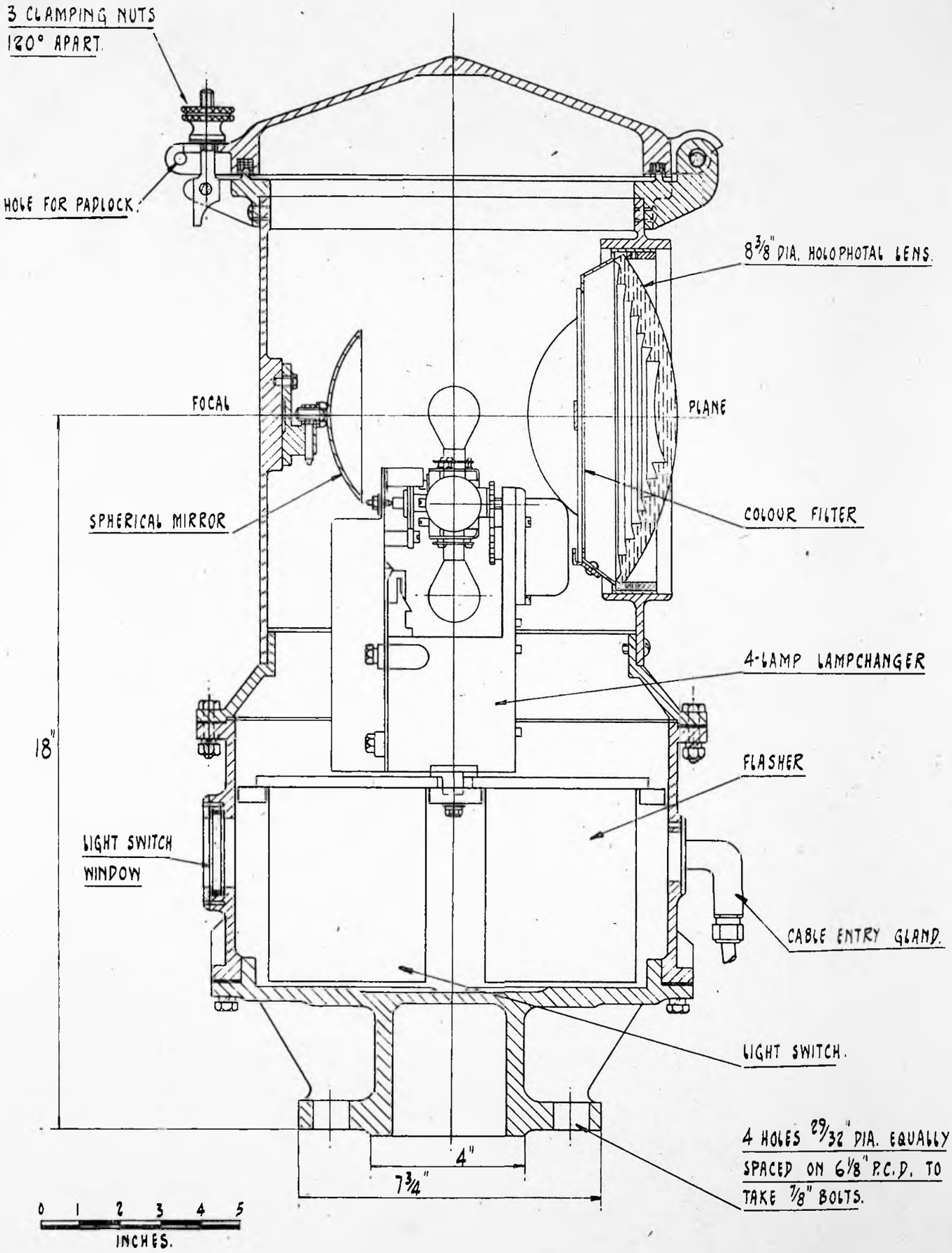

CHANCE - LONDEX LTD

AMENDMENTS.

HOLOPHOTAL LENS RANGE LIGHT.-GEN^L ARRANGEMENT.

DRAWING NUMBER.

CL. 189.

REF.	DATE.	DRAWN BY	ORDER.
	19-5-52.		

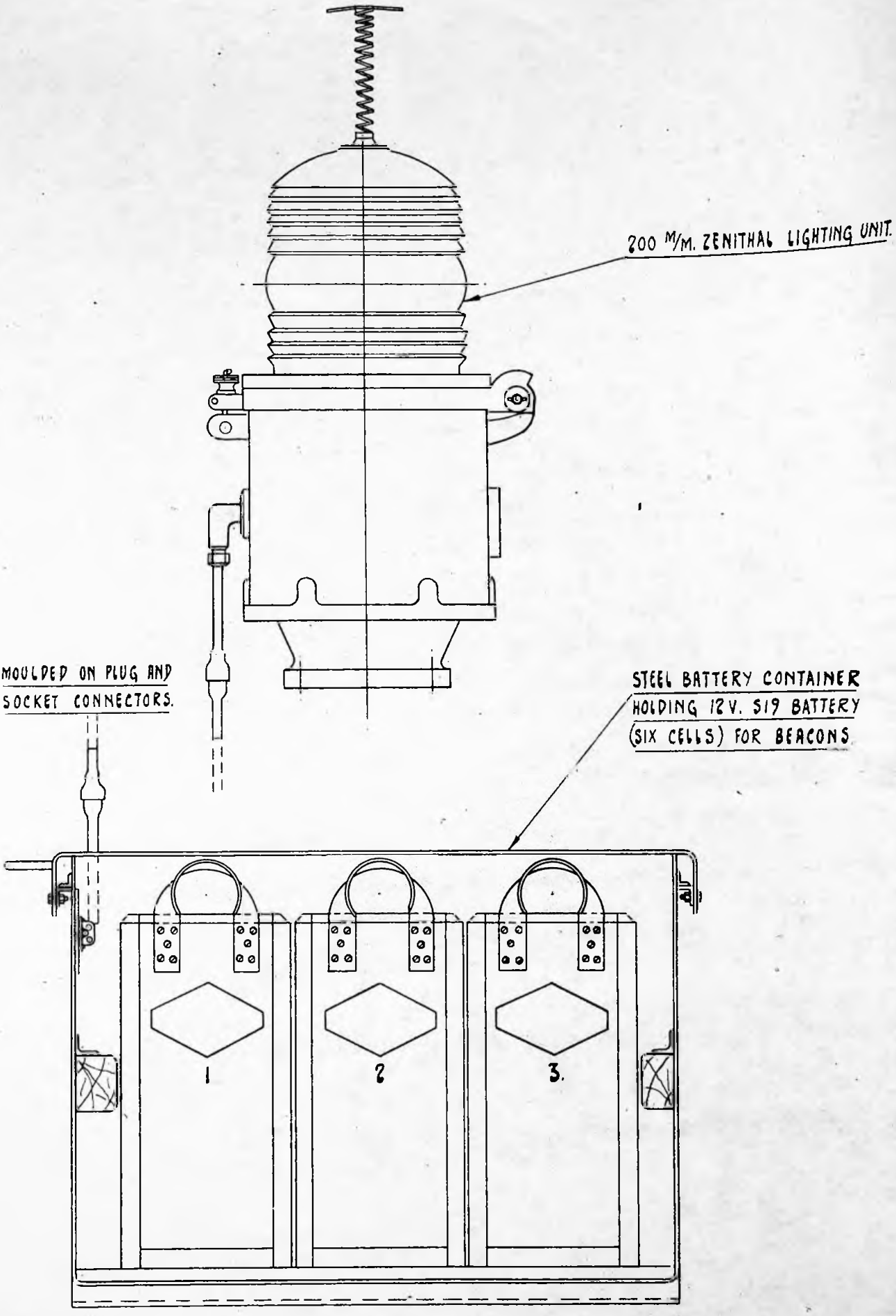

SCALE:- 1/6 FULL SIZE.

CHANCE - LONDEX LTD.

AMENDMENT.

GENERAL ARRANGEMENT OF 200 M/M. ZENITHAL LIGHTING UNIT AND BATTERY SUPPLY FOR BEACONS.

DRAWING NUMBER.

CL.194.

REF.	DATE	DRAWN BY	ORDER.
	26-6-52.		

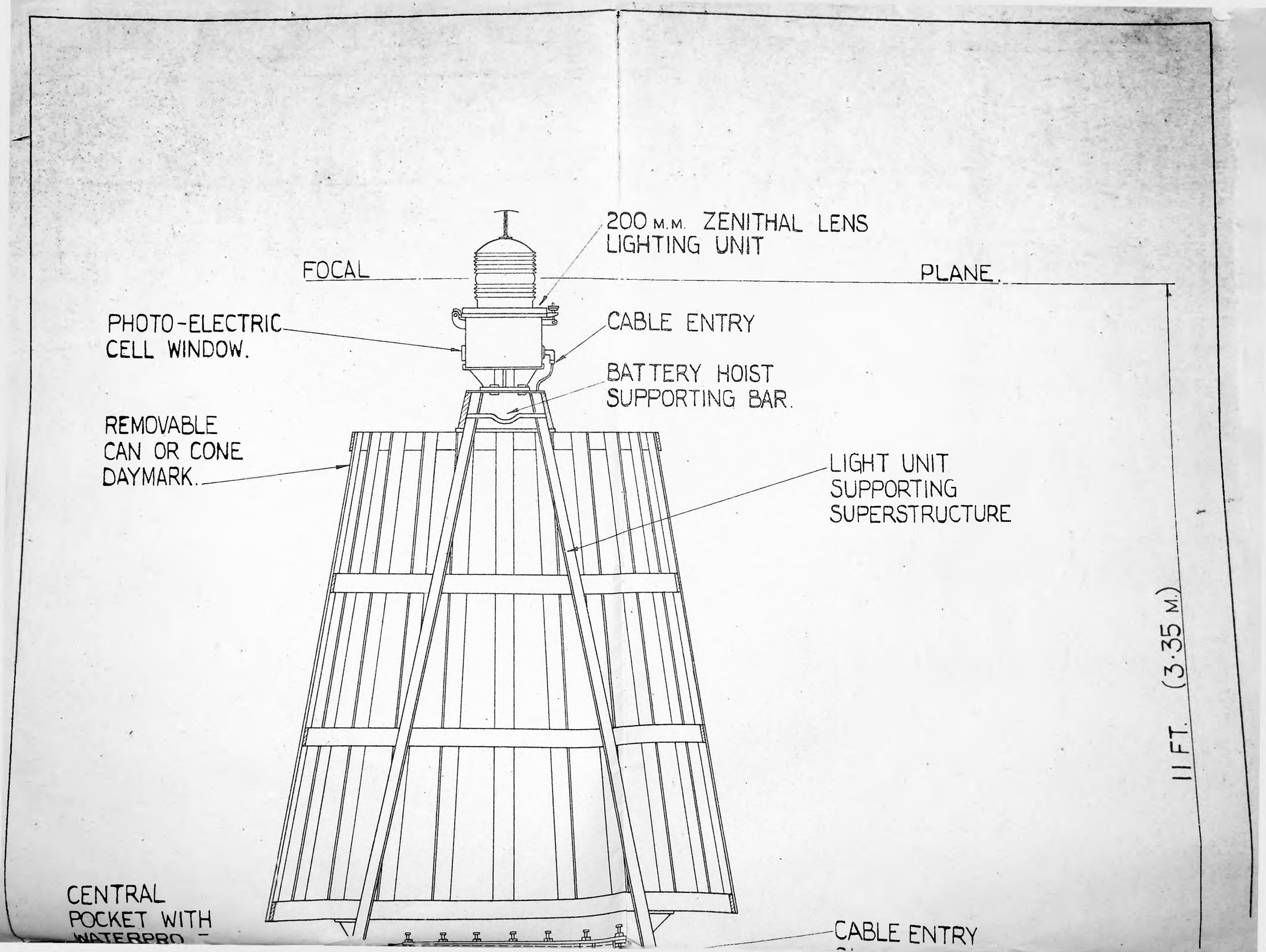
200 M.M. ZENITHAL LENS
LIGHTING UNIT
FOCAL
PLANE.
PHOTO-ELECTRIC
CELL WINDOW.
CABLE ENTRY
BATTERY HOIST
SUPPORTING BAR.
REMOVABLE
CAN OR CONE
DAYMARK.
LIGHT UNIT
SUPPORTING
SUPERSTRUCTURE
11 FT. (3·35 M.)
CENTRAL
POCKET WITH
CABLE ENTRY

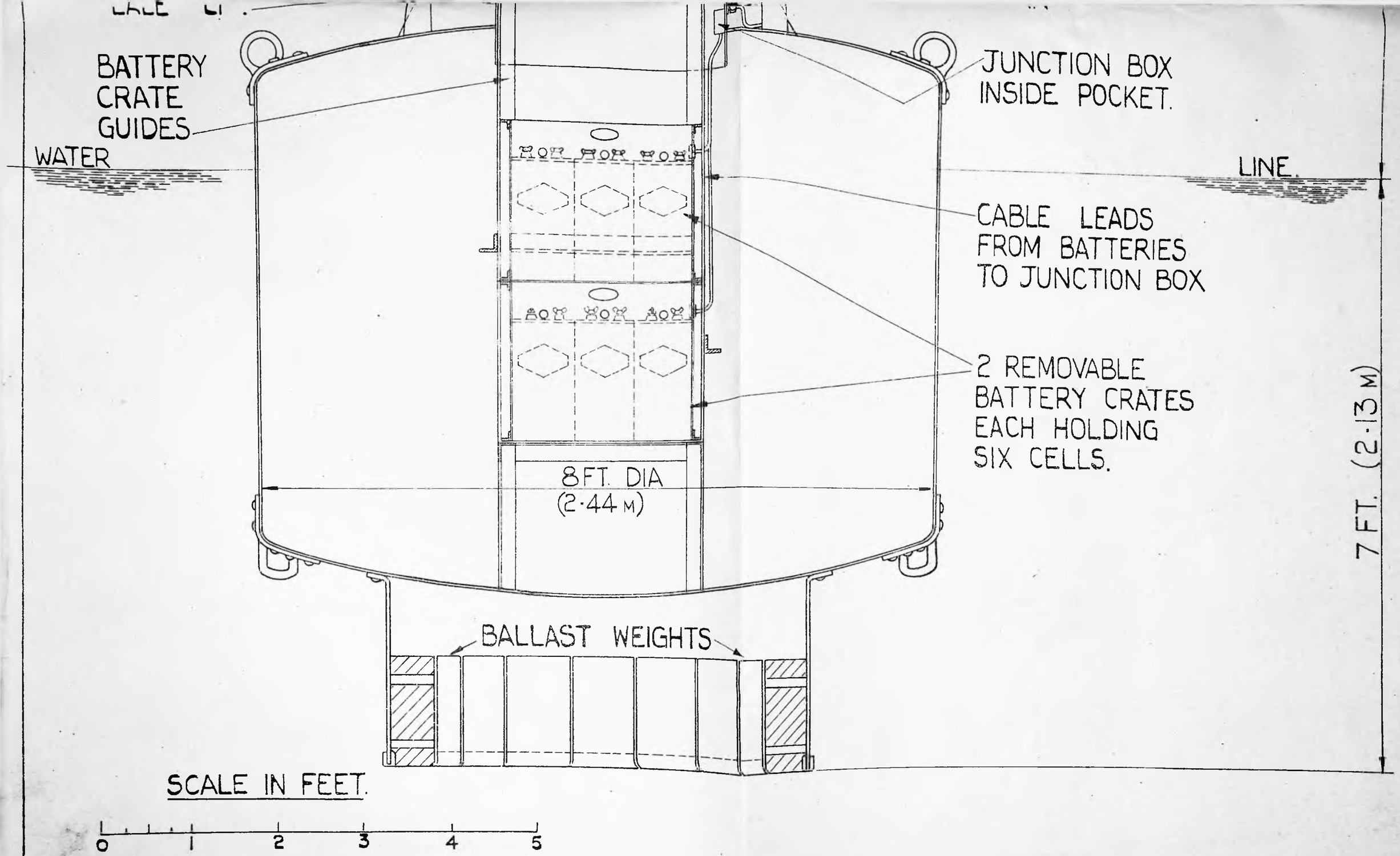

GENERAL ARRANGEMENT OF 8'-0" DIA. BUOY WITH CAN DAYMARK DRG. No. CL 172